THE RECEIVING ADVICE MESSAGE

1. Introduction

* Status

MESSAGE TYPE	: RECADV
REFERENCE DIRECTORY	: D.96A
EANCOM SUBSET VERSION	: 003

* Definition

The Receiving Advice message addresses the business needs related to the receipt of goods. It is used either:

- to confirm reception of goods

- in conjunction with the Despatch Advice message to confirm receipt or to advice discrepancies following the reception of goods and/or the controlled contents of a despatch which has been accepted (the waybill is signed).

- to inform about discrepancies between goods received and goods ordered/planned.

* Principles

The message relates to one consignor and one consignee and is initiated by the party who has received the goods and/or services according to agreed conditions.

The message relates to a single despatch point and a single receiving point. It may cover a number of different items or packages.

It allows the buyer or recipient of goods to provide the supplier or respective agent with;

- a confirmation of the receipt of goods

- a notification on discrepancies between the number of items RECEIVED AND ACCEPTED and the number of items despatched (and/or ordered)

- a notification or instruction concerning the acceptance or suggested actions for the identified discrepancies.

- an instruction for corrections to be undertaken on the invoice or credit notes to be issued which are based on the despatch advice or despatch note. The receiver of goods may also correct internal invoice(s) for goods which are eventually passed on to the final customer.

© Copyright EAN 1997

The Receiving Advice should always be sent by the buyer to the supplier or their respective agents after the goods are physically received and inspected.

The message should be sent within a commercially agreed time period e.g. 24 hours after receipt of goods. This makes it possible for the supplier to check the data of the despatch, adjust the invoice or issue a credit note, control internal procedures, count stock etc.

Scenarios for the Receiving Advice Message

Any number of business needs and actions affecting the whole production/ordering, delivery and invoicing cycle can arise as a result of the actual delivery of goods.

Discrepancies between goods received and accepted, and goods expected to be delivered might lead to adjustments of delivery schedules, orders, invoices, etc. These actions may be covered by the Receiving Advice, other EDI messages and via other communication channels.

Trading partners should review their business procedures and identify those functions and actions which may be covered by the Receiving Advice message. Scenarios covered by the Receiving Advice message can range from simple to complex, determining the ease and degree of automation.

Simple Scenario

Within a simple scenario, the Receiving Advice message is only used to confirm or advise discrepancies related to the Despatch Advice or note.

When only confirming the reception and acceptance of goods, only the header section of the Receiving Advice message need be transmitted. Confirmation of reception might trigger invoicing for goods and services or may be used by the supplier to control the performance of contracted transportation services.

Within a simple scenario, the Receiving Advice is only used to notify discrepancies between goods received and accepted and goods despatched as communicated in the Despatch Advice. In these cases, the Receiving Advice will usually involve information related to goods lost, stolen or damaged in transit, short or excess shipments, unknown items, etc.

Any adjustments to delivery schedules or purchase orders will have been dealt with beforehand or will be handled through other EDI messages or by other communication channels.

Actions to be taken related to any discrepancies may be agreed beforehand and can be specified in the interchange agreement.

Complex Scenario

The functionalities covered by the Receiving Advice within a more complex scenario may include those described above as part of the simple scenario and in addition, information or instructions which might alter an existing delivery schedule, outstanding order, invoice, etc.

© Copyright EAN 1997

Within a more complex scenario the Receiving Advice message might notify discrepancies for both despatched and received and accepted quantities AND despatched and ordered or planned quantities, e.g. a Receiving Advice could change the status of a line item on backorder by requesting a new delivery date, cancelling the item, etc.

Within a more complex scenario, suggested actions or instructions relevant to delivery discrepancies may vary depending on stock situation, sales forecasting, etc.

* Structure of the Receiving Advice Message

The EANCOM Receiving Advice detail section contains two distinct structures.

1. CPS-PAC Segment Group Structure

The first is the CPS-PAC Segment Group structure which can be used to provide information at the shipping container level, (e.g. containers which have been damaged, serialised containers unknown at the reception point, etc.)

This group of segments allows for the provision of shipping container identification numbers. The function or meaning of the identification numbers transmitted in this part of the message should be bilaterally agreed by trading partners and described in the PCI and GIN segments at the CPS-PAC level.

2. CPS-LIN Segment Group Structure

The second option is CPS-LIN Segment Group structure which can be used to provide detailed receiving information for a particular item (see 2 A. Receiving Details per Item below). The item may be contained within any given number of shipping containers which are part of the delivery.

Optionally, more specific receiving information for an item within a particular shipping container can be provided (see 2 B. Receiving Details per Serial Shipping Container Code below). In these cases each shipping container is uniquely identified by an EAN Serial Shipping Container Code.

The EAN/UCC Serial Shipping Container Code

The Serial Shipping Container Code (abbreviated SSCC) is an EAN/UCC standard designed to identify uniquely individual transport packages. It enables merchandise that is packed differently from one transport package to another, for example where products are picked and packed to meet individual orders, to be identified. The standard can support operations such as despatch, distribution and receiving of non-standardised packages.

© Copyright EAN 1997

THE RECEIVING ADVICE

```
The general code structure is:        P      MMMMMMMM SSSSSSSSS   C
                                      1      < ------7------ >  < ----9---- >  1
```

where
- P = Packaging indicator
- M..M = EAN/UCC prefix/company number
- S..S = Serial number assigned by the company
- C = Data check digit

The Serial Shipping Container Code may be bar coded, enabling automatic data capture, using the Application Identifier 00 and the UCC/EAN-128 bar code symbology. For further information please refer to the UCC/EAN Application Identifier Standard.

2 A. Receiving Details per Item.

The LIN segment identifies the item and the QTY segment provides the total quantity for the item which has been received and accepted. The quantity in the QTY segment is the global quantity received and accepted and will relate to one or more shipping containers containing the item which are part of the delivery.

Discrepancies between the quantity received and accepted and other quantities (ordered/despatched) and actions to be taken are indicated in the QVR-DTM segments.

No details per specific shipping container are provided in this approach.

2 B. Receiving Details per Serial Shipping Container Code (SSCC)

Additionally, receiving details per specific shipping container containing the item identified in LIN may be provided. In these cases, LIN will identify the item and the receiving details will be provided per shipping container using the segment group PCI-QTY-QVR-GIN.

The PCI-GIN segments are used to provide the Serial Shipping Container Code of the container containing the item identified in LIN (PCI-GIN). The QTY segment indicates the quantity received and accepted for the specific shipping container. The QVR segment provides information on quantity discrepancies and actions to be taken.

There will be as many PCI-QTY-QVR-GIN repetitions as there are shipping containers containing the item identified in LIN.

CPS-LIN Structure Examples:

A delivery consists of a three shipping containers identified by the SSCC's A, B and C. There shipping containers contain three different items: EAN 1, EAN 2, EAN 3 in the following composition:

SSCC A contains 10 EAN 1
SSCC B contains 10 EAN 1, 15 EAN 2 and 20 EAN 3
SSCC C contains 15 EAN 2 and 15 EAN 3.

© Copyright EAN 1997

SHIPMENT DELIVERED:

SSCC - A	SSCC - B	SSCC - C
10 EAN 1	10 EAN 1 15 EAN 2 20 EAN 3	15 EAN 2 15 EAN 3

A. Receiving Details per Item

The Receiving Advice message may specify receiving details globally per item:

LIN 1	=	EAN 1
QTY 1	=	20
LIN 2	=	EAN 2
QTY 2	=	30
LIN 3	=	EAN 3
QTY 3	=	35

B. Receiving Details per Shipping Container

The Receiving Advice message may specify receiving details globally per SSCC:

LIN 1	=	EAN 1
PCI-GIN	=	SSCC A
QTY	=	10
PCI-GIN	=	SSCC B
QTY	=	10
LIN 2	=	EAN 2
PCI-GIN	=	SSCC B
QTY	=	15
PCI-GIN	=	SSCC C
QTY	=	15
LIN 3	=	EAN 3
PCI-GIN	=	SSCC B
QTY	=	20
PCI-GIN	=	SSCC C
QTY	=	15

(Note: For simplicity, the above examples assume that all quantities despatched are received and accepted (no discrepancies). Under such conditions normally no Receiving Advice message would be sent or only the header section of the message would be sent to confirm reception).

* * *

© Copyright EAN 1997

2. Message Structure Chart

Receiving Advice Heading Section

	UNH	1	M	1	MESSAGE HEADER
	BGM	2	M	1	Beginning of message
	DTM	3	M	10	Date/time/period
┌	SG1		C	10	RFF-DTM
│	RFF	4	M	1	Reference
└	DTM	5	C	1	Date/time/period
┌	SG4		M	10	NAD-SG5-SG6
│	NAD	6	M	1	Name and address
│ ┌	SG5		C	10	RFF
│ └	RFF	7	M	1	Reference
│ ┌	SG6		C	10	CTA-COM
│ │	CTA	8	M	1	Contact information
└ └	COM	9	C	5	Communication contact
┌	SG10		C	10	TDT
└	TDT	10	M	1	Details of transport

Receiving Advice Detail Section

┌	SG16		C	9999	CPS-SG17-SG22
│	CPS	11	M	1	Consignment packing sequence
│ ┌	SG17		C	9999	PAC-QVR-SG18
│ │	PAC	12	M	1	Package
│ │	QVR +	13	C	1	Quantity variances
│ │ ┌	SG18		C	999	PCI-SG20
│ │ │	PCI	14	M	1	Package identification
│ │ │ ┌	SG20		C	999	GIN
│ └ └ └	GIN	15	M	1	Goods identity number
│ ┌	SG22		C	9999	LIN-PIA-QTY-QVR-DTM-SG28-SG29
│	LIN	16	M	1	Line item
│	PIA	17	C	10	Additional product id
│	QTY	18	C	10	Quantity
│	QVR	19	C	10	Quantity variances
│	DTM	20	C	5	Date/time/period
│ ┌	SG28		C	10	RFF-DTM
│ │	RFF	21	M	1	Reference
│ └	DTM	22	C	1	Date/time/period
│ ┌	SG29		C	9999	PCI-QTY-QVR-SG31
│ │	PCI	23	M	1	Package identification
│ │	QTY	24	C	1	Quantity
│ │	QVR	25	C	1	Quantity variances
│ │ ┌	SG31		C	10	GIN

© Copyright EAN 1997

GIN	26	M	1	Goods identity number

Receiving Advice Summary Section

CNT	27	C	1	Control total
UNT	28	M	1	MESSAGE TRAILER

© Copyright EAN 1997

3. Branching Diagram

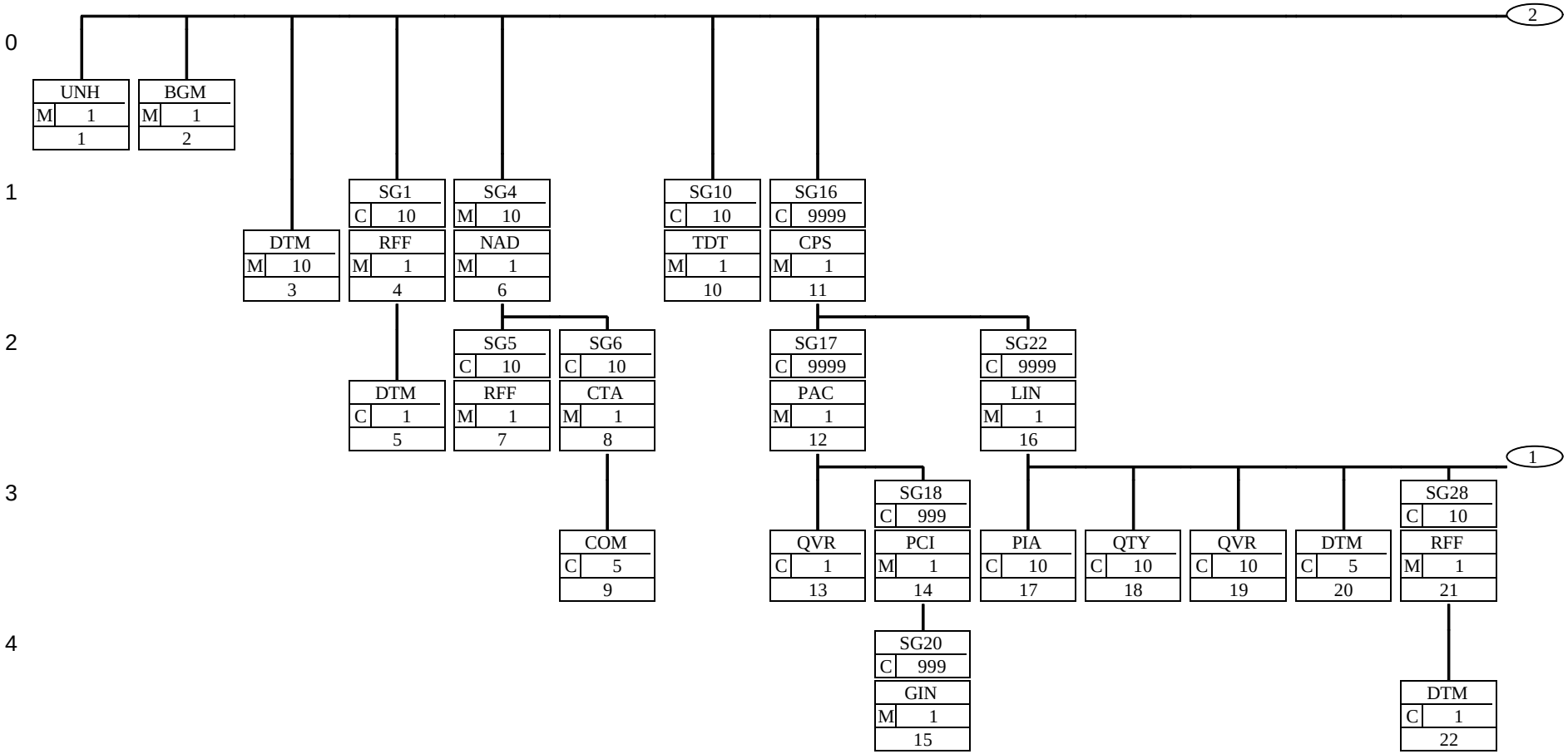

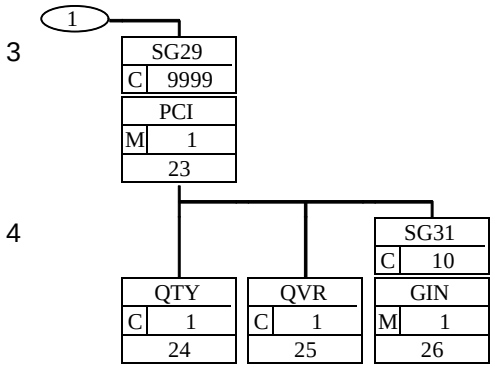

© Copyright EAN 1997

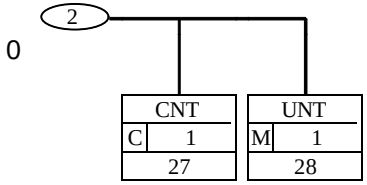
2
0
CNT
C 1
27
UNT
M 1
28

4. Segments Description

Receiving Advice Heading Section

UNH - M 1 - MESSAGE HEADER
This message is used to head, identify and specify a message.

BGM - M 1 - Beginning of message
This segment is used to indicate the type and function of a message and to transmit the identifying number.

DTM - M 10 - Date/time/period
This segment is used to specify any dates related to the complete receiving advice message.

SG1 - C 10 - RFF-DTM
A group of segments giving references where necessary, dates relating to the whole message, e.g. despatch advice, contract number.

RFF - M 1 - Reference
This segment is used to specify references which apply to the whole receiving advice message.

DTM - C 1 - Date/time/period
This segment is used to specify dates relating to the references given in the previous RFF segment.

SG4 - M 10 - NAD-SG5-SG6
A group of segments identifying names, addresses and locations, relevant to the whole Receiving advice.

NAD - M 1 - Name and address
This segment is used to identify the trading partners involved in the Receiving Advice message. Identification of the sender and recipient of the goods is mandatory in the Receiving Advice.

SG5 - C 10 - RFF
A group of segments giving references only relevant to the specified party rather than the whole message.

RFF - M 1 - Reference
This segment is used to specify references related to the party identified in the previous NAD segment.

SG6 - C 10 - CTA-COM
A group of segments giving contact details of the specific person or department within the party identified in the NAD segment.

© Copyright EAN 1997

CTA - M 1 - Contact information
This segment is used to identify contact name and/or department within the party specified in the NAD segment. The EAN location number is particularly suitable for this purpose.

COM - C 5 - Communication contact
This segment identifies the communications number, and type of communications, for the person and/or department identified in the preceding CTA segment.

SG10 - C 10 - TDT
A group of segments specifying details of the mode and means of transport for further identification.

TDT - M 1 - Details of transport
This segment is used to specify the transport details used to deliver the goods detailed in the receiving advice message.

Receiving Advice Detail Section

SG16 - C 9999 - CPS-SG17-SG22
A group of segments providing details of all packages and/or individual items as received. This segment group provides the capability to give the top-down hierarchical relationship of the package levels.

CPS - M 1 - Consignment packing sequence
This segment is used to provide a detailed description of the packaging of the goods held in stock.

SG17 - C 9999 - PAC-QVR-SG18
A group of segments identifying packaging, quantities and marks and numbers.

PAC - M 1 - Package
This segment is used to identify the total number of packages and package types for the hierarchical level identified in the CPS segment.

QVR - C 1 - Quantity variances
This segment is used to indicate quantity variances related to the currently identified package.

SG18 - C 999 - PCI-SG20
A group of segments specifying markings and labels.

PCI - M 1 - Package identification
This segment is used to provide markings and labels information relevant to the packaging unit identified in the PAC segment.

SG20 - C 999 - GIN
A group of segments giving package identification numbers.

© Copyright EAN 1997

GIN - M 1 - Goods identity number
This segment is used to provide identification numbers relevant to the packaging unit identified in the PAC segment.

SG22 - C 9999 - LIN-PIA-QTY-QVR-DTM-SG28-SG29
A group of segments providing details of the product or service received.

LIN - M 1 - Line item
This segment is used to identify the product delivered. If a product has been delivered but not accepted it must be identified using a separate line item. In these cases the received and accepted quantities are zero. Such products might include unknown or not ordered products, excess deliveries, damaged goods, unacceptable product variants or batch numbers, different pack size, etc,. Reasons for the action is detailed in the QTY-QVA-DTM segments.

PIA - C 10 - Additional product id
This segment is used to specify additional product codes for the current line item.

QTY - C 10 - Quantity
This segment is used to specify any quantities related to the current line item.

QVR - C 10 - Quantity variances
This segment is used to specify any variances between what was ordered/shipped and what was received and accepted.

DTM - C 5 - Date/time/period
This segment is used to specify dates related to the current line item.

SG28 - C 10 - RFF-DTM
A group of segments giving references relevant to the line item.

RFF - M 1 - Reference
This segment is used to specify any references associated with the current line item.

DTM - C 1 - Date/time/period
This segment is used to specify dates related to the references given in the previous RFF segment.

SG29 - C 9999 - PCI-QTY-QVR-SG31
A group of segments identifying one specific package or a number of packages, the marks and numbers, quantities and receiving conditions.

PCI - M 1 - Package identification
This segment is used to provide markings and labels information relevant to the product identified in the LIN segment.

© Copyright EAN 1997

QTY - C 1 - Quantity
This segment is used to indicate the quantity of the current line item received and accepted which is contained in the package marked with the Serial Shipping Container Code identified in the following GIN segment.

QVR - C 1 - Quantity variances
This segment is used to specify quantity variances for the current line item which is contained in package marked with the Serial Shipping Container Code identified in the following GIN segment.

SG31 - C 10 - GIN-SG32
A group of segments giving package identification numbers and if required the related anomalies.

GIN - M 1 - Goods identity number
This segment is used to provide the Serial Shipping Container Code marked on the packaging of the current line item.

Receiving Advice Summary Section

CNT - C 1 - Control total
This segment is used to provide message control information for checking on the message receivers in-house system.

UNT - M 1 - MESSAGE TRAILER
This segment is a mandatory UN/EDIFACT segment. It must always be the last segment in the message.

* * *

© Copyright EAN 1997

5. Segments Layout

This section describes each segment used in the EANCOM Receiving Advice message. The original EDIFACT segment layout is listed. The appropriate comments relevant to the EANCOM subset are indicated.

Notes:

1. The segments are presented in the sequence in which they appear in the message. The segment or segment group tag is followed by the (M)andatory / (C)onditional indicator, the maximum number of occurrences and the segment description.

2. Reading from left to right, in column one, the data element tags and descriptions are shown, followed by in the second column the EDIFACT status (M or C), the field format, and the picture of the data elements. These first pieces of information constitute the original EDIFACT segment layout.

   Following the EDIFACT information, EANCOM specific information is provided in the third, fourth, and fifth columns. In the third column a status indicator for the use of (C)onditional EDIFACT data elements (see 2.1 through 2.3 below), in the fourth column the restricted indicator (see point 3 on the following page), and in the fifth column notes and code values used for specific data elements in the message.

2.1 (**M**)andatory data elements in EDIFACT segments retain their status in EANCOM.

2.2 Additionally, there are five types of status for data elements with a (C)onditional EDIFACT status, whether for simple, component or composite data elements. These are listed below and can be identified when relevant by the following abbreviations:

-	REQUIRED	**R**	Indicates that the entity is required and must be sent.
-	ADVISED	**A**	Indicates that the entity is advised or recommended.
-	DEPENDENT	**D**	Indicates that the entity must be sent in certain conditions, as defined by the relevant explanatory note.
-	OPTIONAL	**O**	Indicates that the entity is optional and may be sent at the discretion of the user.
-	NOT USED	**N**	Indicates that the entity is not used and should be omitted.

© Copyright EAN 1997

2.3 If a composite is flagged as **N, NOT USED**, all data elements within that composite will have blank status indicators assigned to them.

3. Status indicators detailed in the fourth column which directly relate to the code values detailed in the fifth column may have two values;

- RESTRICTED ***** A data element marked with an asterix (*) in the fourth column indicates that the listed codes in column five are the only codes available for use with this data element, in this segment, in this message.

- OPEN All data elements where coded representation of data is possible and a restricted set of code values is not indicated are open (no asterix in fourth column). The available codes are listed in the EANCOM Data Elements and Code Sets Directory. Code values may be given as examples or there may be a note on the format or type of code to be used.

* * *

© Copyright EAN 1997

THE RECEIVING ADVICE

UNH - M 1 - MESSAGE HEADER

Function : To head, identify and specify a message.
Segment number : 1

	EDIFACT	EAN	*	Description
0062 Message reference number	M an..14	M		Senders unique message reference. Sequence number of the messages in the interchange. DE 0062 in the UNT will be identical. Sender generated.
S009 MESSAGE IDENTIFIER	M	M		
0065 Message type identifier	M an..6	M	*	RECADV = Receiving advice message
0052 Message type version number	M an..3	M	*	D = Draft directory
0054 Message type release number	M an..3	M	*	96A = Version 96A
0051 Controlling agency	M an..2	M	*	UN = UN/ECE/TRADE/WP.4, United Nations Standard Messages (UNSM)
0057 Association assigned code	C an..6	R	*	EAN003 = EAN version control number.
0068 Common access reference	C an..35	N		
S010 STATUS OF THE TRANSFER	C	N		
0070 Sequence message transfer number	M n..2			
0073 First/last sequence message transfer indication	C a1			

Segment Notes.

This message is used to head, identify and specify a message.

DE's 0065, 0052, 0054 and 0051: Indicate that the message is a UNSM Receiving Advice based on the D.96A directory under the control of the United Nations.

DE 0057: Indicates that the message is the EANCOM version 003 of the Receiving Advice.

Example :

UNH+ME000001+RECADV:D:96A:UN:EAN003'

© Copyright EAN 1997

THE RECEIVING ADVICE

BGM - M	1 -	Beginning of message
Function	:	To indicate the type and function of a message and to transmit the identifying number.
Segment number	:	2

		EDIFACT	EAN	*	Description
C002	**DOCUMENT/MESSAGE NAME**	C	R		
1001	Document/message name, coded	C an..3	R	*	352 = Receiving advice (EAN Code)
1131	Code list qualifier	C an..3	N		
3055	Code list responsible agency, coded	C an..3	R	*	9 = EAN (International Article Numbering association)
1000	Document/message name	C an..35	O		
1004	**Document/message number**	C an..35	R		Receiving Advice number assigned by the document sender.
1225	**Message function, coded**	C an..3	R	*	5 = Replace 9 = Original
4343	**Response type, coded**	C an..3	N		

Segment Notes.

This segment is used to indicate the type and function of a message and to transmit the identifying number.

All references other than the document message number DE 1004 are to be put into the RFF segment.

DE 1004: It is recommended that the length of the document number be restricted to a maximum of 17 characters.

DE 1225: The message function coded, is a critical data element in this segment. It applies to all data indicated in the message. The following definitions apply for the restricted codes:

5 = Replace - This code indicates that the current receiving advice message is a replacement due to an error in a previous message. The previous message should be identified in the RFF segment group 1.

9 = Original - An original transmission of a Receiving Advice.

Example :

BGM+352::9+REC5488+9'

© Copyright EAN 1997

DTM - M	10 -	Date/time/period
Function	:	To specify date, and/or time, or period.
Segment number	:	3

	EDIFACT	EAN	*	Description
C507 DATE/TIME/PERIOD	M	M		
2005 Date/time/period qualifier	M an..3	M	*	35 = Delivery date/time, actual 50 = Goods receipt date/time 137 = Document/message date/time 200 = Pick-up/collection date/time of cargo
2380 Date/time/period	C an..35	R		
2379 Date/time/period format qualifier	C an..3	R		102 = CCYYMMDD 203 = CCYYMMDDHHMM 718 = CCYYMMDD-CCYYMMDD

Segment Notes.

This segment is used to specify any dates related to the complete receiving advice message.

DE 2005: Identification of the 'Document/message date/time' (code value 137) is mandatory in the receiving advice
message.

35 = Delivery date/time - This code is used to indicate a situation when the date/time of delivery was not the same as the date/time on which the goods were formally received.

200 = Pick-up date/time of cargo (backhauling) - This code is used to indicate the date/time on which goods detailed in the message were collected by the buyer.

Example :

DTM+137:19971111:102'

DTM+50:199711051640:203'

The goods were received on the 5th of November 1997 at 4:40pm.

SG1 - C	10 -	RFF-DTM	
RFF - M	1 -	Reference	

Function : To specify a reference.
Segment number : 4

	EDIFACT	EAN	*	Description
C506 REFERENCE	M	M		
1153 Reference qualifier	M an..3	M		AAK = Despatch advice number AAU = Despatch note number ALO = Receiving advice number CR = Customer reference number ON = Order number (buyer) POR = Purchase order response number PP = Purchase order change number VN = Order number (supplier)
1154 Reference number	C an..35	R		
1156 Line number	C an..6	N		
4000 Reference version number	C an..35	N		

Segment Notes.

This segment is used to specify references which apply to the whole receiving advice message.

DE 1153: The code 'ALO' should only be used when the code value '5' was used in DE 1225 of the BGM segment.

Example :

RFF+AAK:533662'

SG1 - C	10 -	RFF-DTM			
DTM - C	1 -	Date/time/period			
Function :		To specify date, and/or time, or period.			
Segment number : 5					
		EDIFACT	EAN	*	Description
C507	**DATE/TIME/PERIOD**	M	M		
2005	Date/time/period qualifier	M an..3	M	*	171 = Reference date/time
2380	Date/time/period	C an..35	R		
2379	Date/time/period format qualifier	C an..3	R		102 = CCYYMMDD

Segment Notes.

This segment is used to specify dates relating to the references given in the previous RFF segment.

Example:

DTM+171:19971025:102'

SG4 - M	10 -	NAD-SG5-SG6	
NAD - M	1 -	Name and address	
Function :		To specify the name/address and their related function, either by CO82 only and/or structured by CO80 thru 3207.	
Segment number : 6			

		EDIFACT	EAN	*	Description
3035	**Party qualifier**	M an..3	M		BY = Buyer DP = Delivery party SH = Shipper (EAN Code) SU = Supplier UC = Ultimate consignee
C082	**PARTY IDENTIFICATION DETAILS**	C	A		
3039	Party id. identification	M an..35	M		EAN Location Number - Format n13
1131	Code list qualifier	C an..3	N		
3055	Code list responsible agency, coded	C an..3	R	*	9 = EAN (International Article Numbering association)
C058	**NAME AND ADDRESS**	C	N		
3124	Name and address line	M an..35			
3124	Name and address line	C an..35			
3124	Name and address line	C an..35			
3124	Name and address line	C an..35			
3124	Name and address line	C an..35			
C080	**PARTY NAME**	C	D		
3036	Party name	M an..35	M		Party Name in clear text.
3036	Party name	C an..35	O		
3036	Party name	C an..35	O		
3036	Party name	C an..35	O		
3036	Party name	C an..35	O		
3045	Party name format, coded	C an..3	O		
C059	**STREET**	C	D		
3042	Street and number/p.o. box	M an..35	M		Building Name/Number and Street Name and/or P.O. Box
3042	Street and number/p.o. box	C an..35	O		
3042	Street and number/p.o. box	C an..35	O		
3042	Street and number/p.o. box	C an..35	O		
3164	**City name**	C an..35	D		City/Town, clear text.
3229	**Country sub-entity identification**	C an..9	D		County/State in clear text.
3251	**Postcode identification**	C an..9	D		Postal Code
3207	**Country, coded**	C an..3	D		ISO 3166 two alpha code

© Copyright EAN 1997

SG4	- M	10 -	NAD-SG5-SG6
NAD	- M	1 -	Name and address

Function : To specify the name/address and their related function, either by CO82 only and/or structured by CO80 thru 3207.

Segment number : 6

Segment Notes.

This segment is used to identify the trading partners involved in the Receiving Advice message. Identification of the
sender and recipient of the goods is mandatory in the Receiving Advice.

If coded address information can not be used it is recommended to use a structured address (C080 through 3207).

DE 3039: For identification of parties it is recommended to use EAN location number.

Example :

NAD + BY + 5412345000013::9'

NAD + SU + 5412345000020::9'

Dependency Notes :

The following composites and data elements are only used when a coded name and address can not be used. The affected composites and data elements are as follows:

C080 - C059 - 3164 - 3229 - 3251 - 3207

© Copyright EAN 1997

SG4	- M	10 -	NAD-SG5-SG6
SG5	- C	10 -	RFF
RFF	- M	1 -	Reference

Function : To specify a reference.
Segment number : 7

	EDIFACT	EAN	*	Description
C506 REFERENCE	M	M		
1153 Reference qualifier	M an..3	M	*	API = Additional party identification (EAN Code) FC = Fiscal number GN = Government reference number VA = VAT registration number
1154 Reference number	C an..35	R		
1156 Line number	C an..6	N		
4000 Reference version number	C an..35	N		

Segment Notes.

This segment is used to specify references related to the party identified in the previous NAD segment.

Example :

RFF+VA:AF48776'

SG4	- M	10 -	NAD-SG5-SG6
SG6	- C	10 -	CTA-COM
CTA	- M	1 -	Contact information

Function : To identify a person or a department to whom communication should be directed.
Segment number : 8

		EDIFACT	EAN	*	Description
3139	**Contact function, coded**	C an..3	R		GR = Goods receiving contact
C056	**DEPARTMENT OR EMPLOYEE DETAILS**	C	O		
3413	Department or employee identification	C an..17	O		
3412	Department or employee	C an..35	O		

Segment Notes.

This segment is used to identify contact name and/or department within the party specified in the NAD segment. The EAN location number is particularly suitable for this purpose.

Example :

CTA+GR+:C SANCHEZ'

SG4 - M	10 -	NAD-SG5-SG6
SG6 - C	10 -	CTA-COM
COM - C	5 -	Communication contact

Function : To identify a communication number of a department or a person to whom communication should be directed.

Segment number : 9

	EDIFACT	EAN	*	Description
C076 COMMUNICATION CONTACT	M	M		
3148 Communication number	M an..512	M		
3155 Communication channel qualifier	M an..3	M		EI = EDI EM = Electronic mail FX = Fax TE = Telephone TL = Telex XF = X.400

Segment Notes.

This segment identifies the communications number, and type of communications, for the person and/or department
identified in the preceding CTA segment.

Example :

COM+00445885521:TE'

SG10 - C	10 -	TDT			
TDT - M	1 -	Details of transport			
Function :		To specify the transport details such as mode of transport, means of transport, its conveyance reference number and the identification of the means of transport.			
Segment number : 10					
		EDIFACT	EAN	*	Description
8051	**Transport stage qualifier**	M an..3	M		20 = Main-carriage transport
8028	**Conveyance reference number**	C an..17	O		Reference number covering the transport.
C220	**MODE OF TRANSPORT**	C	R		
8067	Mode of transport, coded	C an..3	R		10 = Maritime transport 20 = Rail transport 30 = Road transport 40 = Air transport 60 = Multimodal transport
8066	Mode of transport	C an..17	N		
C228	**TRANSPORT MEANS**	C	O		
8179	Type of means of transport identification	C an..8	D		23 = Rail bulk car 25 = Rail express 31 = Truck
8178	Type of means of transport	C an..17	D		
C040	**CARRIER**	C	O		
3127	Carrier identification	C an..17	A		EAN Location Number - Format n13
1131	Code list qualifier	C an..3	O		
3055	Code list responsible agency, coded	C an..3	A		9 = EAN (International Article Numbering association)
3128	Carrier name	C an..35	O		
8101	**Transit direction, coded**	C an..3	O		BS = Buyer to supplier SB = Supplier to buyer
C401	**EXCESS TRANSPORTATION INFORMATION**	C	N		
8457	Excess transportation reason, coded	M an..3			
8459	Excess transportation responsibility, coded	M an..3			
7130	Customer authorization number	C an..17			
C222	**TRANSPORT IDENTIFICATION**	C	O		
8213	Id. of means of transport identification	C an..9	O		
1131	Code list qualifier	C an..3	O		
3055	Code list responsible agency, coded	C an..3	O		
8212	Id. of the means of transport	C an..35	R		Vehicle licence plate/Aircraft number
8453	Nationality of means of transport, coded	C an..3	O		ISO 3166 two alpha code

© Copyright EAN 1997

SG10 - C	10 -	TDT			
TDT - M	1 -	Details of transport			
Function :		To specify the transport details such as mode of transport, means of transport, its conveyance reference number and the identification of the means of transport.			
Segment number : 10					
	EDIFACT	EAN	*	Description	
8281 Transport ownership, coded	C an..3	N			

Segment Notes.

This segment is used to specify the transport details used to deliver the goods detailed in the receiving advice message.

Example :

TDT+20++30+31'

Dependency Notes:

Data Elements 8179 and 8178 are only used when the type of transport must be specifically identified, that is, when
a generic description such as road transport is unsuitable.

SG16 - C	9999 -	CPS-SG17-SG22	
CPS - M	1 -	Consignment packing sequence	
Function :		To identify the sequence in which physical packing is presented in the consignment, and optionally to identify the hierarchical relationship between packing layers.	
Segment number : 11			

	EDIFACT	EAN	*	Description
7164 Hierarchical id. number	M an..12	M		Sequential numbering recommended.
7166 Hierarchical parent id.	C an..12	A		
7075 Packaging level, coded	C an..3	N		

Segment Notes.

This segment is used to provide a detailed description of the packaging of the goods held in stock.

DE 7164: When not identifying different shipment hierarchical levels within the Receiving Advice, it is recommended to use a default value of 1.

Example :

CPS + 1'

SG16 - C	9999 -	CPS-SG17-SG22	
SG17 - C	9999 -	PAC-QVR-SG18	
PAC - M	1 -	Package	

Function : To describe the number and type of packages/physical units.
Segment number : 12

		EDIFACT	EAN	*	Description
7224	**Number of packages**	C n..8	O		
C531	**PACKAGING DETAILS**	C	A		
7075	Packaging level, coded	C an..3	N		
7233	Packaging related information, coded	C an..3	O		50 = Package barcoded EAN-13 or EAN-8 51 = Package barcoded ITF-14 or ITF-6 52 = Package barcoded UCC or EAN-128
7073	Packaging terms and conditions, coded	C an..3	O		1 = Packaging cost paid by supplier 2 = Packaging cost paid by recipient 3 = Packaging cost not charged (returnable)
C202	**PACKAGE TYPE**	C	O		
7065	Type of packages identification	C an..17	A		09 = Returnable pallet (EAN Code) 201 = Pallet ISO 1 - 1/1 EURO Pallet (EAN Code) PK = Package SL = Slipsheet
1131	Code list qualifier	C an..3	O		
3055	Code list responsible agency, coded	C an..3	O		
7064	Type of packages	C an..35	O		
C402	**PACKAGE TYPE IDENTIFICATION**	C	N		
7077	Item description type, coded	M an..3			
7064	Type of packages	M an..35			
7143	Item number type, coded	C an..3			
7064	Type of packages	C an..35			
7143	Item number type, coded	C an..3			
C532	**RETURNABLE PACKAGE DETAILS**	C	D		
8395	Returnable package freight payment responsibility, coded	C an..3	O		1 = Paid by customer 2 = Free 3 = Paid by supplier
8393	Returnable package load contents, coded	C an..3	N		

Segment Notes.

This segment is used to identify the total number of packages and package types for the hierarchical level identified in the CPS segment.

Please refer to the 'Structure of the Receiving Advice Message' section in the introduction for details on the use of

SG17 - C	9999 -	PAC-QVR-SG18
PAC - M	1 -	Package
Function :		To describe the number and type of packages/physical units.
Segment number : 12		

the PAC segment.

Example :

PAC+10++201'

Dependency Notes :

Composite C532 is only used where the packaging being described is returnable. This composite identifies who is responsible for payment of its return.

SG16 - C	9999 -	CPS-SG17-SG22
SG17 - C	9999 -	PAC-QVR-SG18
QVR - C	1 -	Quantity variances

Function : To specify item details relating to quantity variances.

Note: This segment replaces segment QVA (which has been deleted in this directory).

Segment number : 13

		EDIFACT	EAN	*	Description
C279	**QUANTITY DIFFERENCE INFORMATION**	C	R		
6064	Quantity difference	M n..15	M		Specify the actual variance amount here.
6063	Quantity qualifier	C an..3	R		124 = Damaged goods
4221	**Discrepancy, coded**	C an..3	O		
C960	**REASON FOR CHANGE**	C	O		
4295	Change reason, coded	C an..3	O		AUE = Article code unknown (EAN Code) BN = Bar code not readable (EAN Code) PC = Pack difference
1131	Code list qualifier	C an..3	O		
3055	Code list responsible agency, coded	C an..3	O		9 = EAN (International Article Numbering association)
4294	Change reason	C an..35	O		

Segment Notes.

This segment is used to indicate quantity variances related to the currently identified package.

For negative values (e.g. damaged goods not accepted) the variance must be expressed as negative.

Example :

QVR+-40:124++BN'

© Copyright EAN 1997

SG16 - C	9999 -	CPS-SG17-SG22
SG17 - C	9999 -	PAC-QVR-SG18
SG18 - C	999 -	PCI-SG20
PCI - M	1 -	Package identification

Function : To specify markings and labels on individual packages or physical units.
Segment number : 14

	EDIFACT	EAN	*	Description
4233 Marking instructions, coded	C an..3	R		17 = Supplier's instructions 33E = Marked with serial shipping container code (EAN Code)
C210 MARKS & LABELS	C	O		
7102 Shipping marks	M an..35	M		
7102 Shipping marks	C an..35	O		
7102 Shipping marks	C an..35	O		
7102 Shipping marks	C an..35	O		
7102 Shipping marks	C an..35	O		
7102 Shipping marks	C an..35	O		
7102 Shipping marks	C an..35	O		
7102 Shipping marks	C an..35	O		
7102 Shipping marks	C an..35	O		
7102 Shipping marks	C an..35	O		
8275 Container/package status, coded	C an..3	N		
C827 TYPE OF MARKING	C	N		
7511 Type of marking, coded	M an..3			
1131 Code list qualifier	C an..3			
3055 Code list responsible agency, coded	C an..3			

Segment Notes.

This segment is used to provide markings and labels information relevant to the packaging unit identified in the PAC segment.

The segment may be used to provide labelling information on shipping containers not known by the receiver of the goods.

Example :

PCI+17+CONTAINER ABN54421'

SG16 - C	9999 -	CPS-SG17-SG22
SG17 - C	9999 -	PAC-QVR-SG18
SG18 - C	999 -	PCI-SG20
SG20 - C	999 -	GIN
GIN - M	1 -	Goods identity number

Function : To give specific identification numbers, either as single numbers or ranges.
Segment number : 15

	EDIFACT	EAN	*	Description
7405 Identity number qualifier	M an..3	M		BJ = Serial shipping container code
C208 IDENTITY NUMBER RANGE	M	M		
7402 Identity number	M an..35	M		
7402 Identity number	C an..35	O		
C208 IDENTITY NUMBER RANGE	C	O		
7402 Identity number	M an..35	M		
7402 Identity number	C an..35	O		
C208 IDENTITY NUMBER RANGE	C	O		
7402 Identity number	M an..35	M		
7402 Identity number	C an..35	O		
C208 IDENTITY NUMBER RANGE	C	O		
7402 Identity number	M an..35	M		
7402 Identity number	C an..35	O		
C208 IDENTITY NUMBER RANGE	C	O		
7402 Identity number	M an..35	M		
7402 Identity number	C an..35	O		

Segment Notes.

This segment is used to provide identification numbers relevant to the packaging unit identified in the PAC segment.

DE C208: If a sequential series of identity numbers is provided (e.g., 1 up to and including 10) only one repetition of the C208 composite is needed with the first repetition of 7402 specifying the numerically smaller identity number
(e.g., 1) and the second repetition the larger identity number (e.g., 10). If identity numbers are not sequential and part of a series (e.g., 1, 3, and 10) then a separate C208 and DE 7402 must be used for each identity number.

In EANCOM it is recommended to use the Serial Shipping Container Code (SSCC) for unique identification of individual transport packages.

Example :

GIN+BJ+354123450000000014'

SG16 - C	9999 -	CPS-SG17-SG22
SG22 - C	9999 -	LIN-PIA-QTY-QVR-DTM-SG28-SG29
LIN - M	1 -	Line item

Function : To identify a line item and configuration.
Segment number : 16

		EDIFACT	EAN	*	Description
1082	**Line item number**	C n..6	R		Application generated number of the line item within the Receiving Advice.
1229	**Action request/notification, coded**	C an..3	N		
C212	**ITEM NUMBER IDENTIFICATION**	C	D		
7140	Item number	C an..35	R		Format n..14 EAN-8, UPC-A, EAN-13, or DUN-14 - this is the number of the article which has been received.
7143	Item number type, coded	C an..3	R	*	EN = International Article Numbering Association (EAN) UP = UPC (Universal product code)
1131	Code list qualifier	C an..3	N		
3055	Code list responsible agency, coded	C an..3	O		
C829	**SUB-LINE INFORMATION**	C	D		
5495	Sub-line indicator, coded	C an..3	R	*	1 = Sub-line information
1082	Line item number	C n..6	R		
1222	**Configuration level**	C n..2	N		
7083	**Configuration, coded**	C an..3	D		A = Added to the configuration D = Deleted from the configuration I = Included in the configuration

Segment Notes.

This segment is used to identify the product delivered. If a product has been delivered but not accepted it must be identified using a separate line item. In these cases the received and accepted quantities are zero. Such products might include unknown or not ordered products, excess deliveries, damaged goods, unacceptable product variants or batch numbers, different pack size, etc,. Reasons for the action is detailed in the QTY-QVA-DTM segments.

Example :

LIN+1++5412345123453:EN'

Dependency Notes :

DE C212: This composite will only be used for the identification of EAN/UPC codes. If another coding structure is
required, e.g. HIBC, this composite will not be used and the code will be detailed in the PIA segment.

DE's C829 and 7083: These data elements are only used when sub-lines are required.

FOR A COMPLETE DESCRIPTION ON THE USAGE OF SUB-LINES PLEASE REFER TO PART I, SECTION 4.11 .

SG16 - C	9999 -	CPS-SG17-SG22
SG22 - C	9999 -	LIN-PIA-QTY-QVR-DTM-SG28-SG29
PIA - C	10 -	Additional product id

Function : To specify additional or substitutional item identification codes.
Segment number : 17

		EDIFACT	EAN	*	Description
4347	**Product id. function qualifier**	M an..3	M	*	1 = Additional identification 5 = Product identification
C212	**ITEM NUMBER IDENTIFICATION**	M	M		
7140	Item number	C an..35	R		
7143	Item number type, coded	C an..3	R		AC = HIBC (Health Industry Bar Code) EN = International Article Numbering Association (EAN) IB = ISBN (International Standard Book Number) IN = Buyer's item number PV = Promotional variant number SA = Supplier's article number
1131	Code list qualifier	C an..3	N		
3055	Code list responsible agency, coded	C an..3	O		9 = EAN (International Article Numbering association) 91 = Assigned by supplier or supplier's agent 92 = Assigned by buyer or buyer's agent
C212	**ITEM NUMBER IDENTIFICATION**	C	O		
7140	Item number	C an..35	R		
7143	Item number type, coded	C an..3	R		
1131	Code list qualifier	C an..3	N		
3055	Code list responsible agency, coded	C an..3	O		
C212	**ITEM NUMBER IDENTIFICATION**	C	O		
7140	Item number	C an..35	R		
7143	Item number type, coded	C an..3	R		
1131	Code list qualifier	C an..3	N		
3055	Code list responsible agency, coded	C an..3	O		
C212	**ITEM NUMBER IDENTIFICATION**	C	O		
7140	Item number	C an..35	R		
7143	Item number type, coded	C an..3	R		
1131	Code list qualifier	C an..3	N		
3055	Code list responsible agency, coded	C an..3	O		

© Copyright EAN 1997

SG22 - C	9999 -	LIN-PIA-QTY-QVR-DTM-SG28-SG29
PIA - C	10 -	Additional product id

Function : To specify additional or substitutional item identification codes.
Segment number : 17

		EDIFACT	EAN	*	Description
C212	**ITEM NUMBER IDENTIFICATION**	C	O		
7140	Item number	C an..35	R		
7143	Item number type, coded	C an..3	R		
1131	Code list qualifier	C an..3	N		
3055	Code list responsible agency, coded	C an..3	O		

Segment Notes.

This segment is used to specify additional product codes for the current line item.

DE 4347: Product Id function, coded has the following restricted coded functions:

1 = Additional Identification - To provide an additional identity for the primary EAN article number identified in the LIN segment. The additional code can consist of:

A supplemental identification which provides more information complementary to the main article number provided
in the LIN segment, e.g., a batch number, promotional variant number, etc,.

An alternative identification which may be used instead of the main article number provided in the LIN segment, e.
g., a buyers article number, an HIBC code, etc.

5 = Product Identification - To provide an additional product identification which is of equal importance or significance to the EAN article number provided in the LIN segment.

Examples :

PIA + 1 + AB5124:IN'

In this example the PIA segment is used to provide an additional identification to the article number provided in the
LIN segment. The EAN article number 5412345123453 provided in the LIN segment refers to the internal buyer's item number AB5124.

PIA + 5 + 4000862141411:EN'

This example identifies the EAN article number 4000862141411 as a code of equal standing with the EAN article number 5412345123453 identified in the LIN segment.

SG16 - C	9999 -	CPS-SG17-SG22
SG22 - C	9999 -	LIN-PIA-QTY-QVR-DTM-SG28-SG29
QTY - C	10 -	Quantity

Function : To specify a pertinent quantity.
Segment number : 18

	EDIFACT	EAN	*	Description
C186 QUANTITY DETAILS	M	M		
6063 Quantity qualifier	M an..3	M	*	12 = Despatch quantity 21 = Ordered quantity 46 = Delivered quantity 66 = Committed quantity 194 = Received and accepted
6060 Quantity	M n..15	M		
6411 Measure unit qualifier	C an..3	D		KGM = Kilogram

Segment Notes.

This segment is used to specify any quantities related to the current line item.

Example :

QTY+194:150'

Dependency Notes :

DE 6411: This DE is only used if the current product is of variable quantity.

SG16 - C	9999 -	CPS-SG17-SG22
SG22 - C	9999 -	LIN-PIA-QTY-QVR-DTM-SG28-SG29
QVR - C	10 -	Quantity variances

Function : To specify item details relating to quantity variances.

Note: This segment replaces segment QVA (which has been deleted in this directory).

Segment number : 19

		EDIFACT	EAN	*	Description
C279	**QUANTITY DIFFERENCE INFORMATION**	C	R		
6064	Quantity difference	M n..15	M		Specify the actual variance amount here.
6063	Quantity qualifier	C an..3	R		12 = Despatch quantity 21 = Ordered quantity 46 = Delivered quantity 195 = Received, not accepted, to be returned 196 = Received, not accepted, to be destroyed
4221	**Discrepancy, coded**	C an..3	O		AC = Over-shipped AE = Delivered but not advised AF = Goods delivered damaged AG = Delivered too late BP = Shipment partial - back order to follow CP = Shipment partial - considered complete, no backorder
C960	**REASON FOR CHANGE**	C	O		
4295	Change reason, coded	C an..3	R		AT = Item not ordered AUE = Article code unknown (EAN Code) BN = Bar code not readable (EAN Code) DME = Damaged (EAN Code) IS = Item represents substitution from original order (EAN Code) PC = Pack difference PE = Minimum/maximum product durability date unacceptable (EAN Code)
1131	Code list qualifier	C an..3	O		
3055	Code list responsible agency, coded	C an..3	O		
4294	Change reason	C an..35	O		

Segment Notes.

This segment is used to specify any variances between what was ordered/shipped and what was received and accepted.

For negative values (e.g. damaged goods not accepted) the variance must be expressed as negative.

DE 6064 and 6063: These DE's must be used to indicate the quantity not being accepted, which is the difference between the despatched (delivered) quantity and the received and accepted quantity.

© Copyright EAN 1997

SG22 - C	9999 -	LIN-PIA-QTY-QVR-DTM-SG28-SG29
QVR - C	10 -	Quantity variances

Function : To specify item details relating to quantity variances.

Note: This segment replaces segment QVA (which has been deleted in this directory).

Segment number : 19

Example :

QVR+40:195+AC'

40 units of the current line item were received but not accepted because they were over shipped. These extra units will be returned to the supplier.

SG16 - C	9999 -	CPS-SG17-SG22
SG22 - C	9999 -	LIN-PIA-QTY-QVR-DTM-SG28-SG29
DTM - C	5 -	Date/time/period

Function : To specify date, and/or time, or period.
Segment number : 20

	EDIFACT	EAN	*	Description
C507 DATE/TIME/PERIOD	M	M		
2005 Date/time/period qualifier	M an..3	M		61 = Cancel if not delivered by this date 200 = Pick-up/collection date/time of cargo 360 = Sell by date
2380 Date/time/period	C an..35	R		
2379 Date/time/period format qualifier	C an..3	R		102 = CCYYMMDD 203 = CCYYMMDDHHMM 718 = CCYYMMDD-CCYYMMDD

Segment Notes.

This segment is used to specify dates related to the current line item.

DE 2005:

'200, Pick-up/collection date of cargo' - may be used to specify the collection date of goods being returned, and may be used in conjunction with QVR segment DE 6063 qualifier '195, Received not accepted, to be returned'.

'61, Cancel if not delivered by this date' - may be used in back-order situations and may be used in conjunction with QVA segment DE 4221 code BP = Shipment partial, back order to follow.

'360, Sell by date' - may be used to specify the sell by date of rejected products and may be used in conjunction with QVA segment DE 4295 code PE = minimum/maximum durability date unacceptable.

Example :

DTM+200:19971115:102'

SG16 - C	9999 -	CPS-SG17-SG22
SG22 - C	9999 -	LIN-PIA-QTY-QVR-DTM-SG28-SG29
SG28 - C	10 -	RFF-DTM
RFF - M	1 -	Reference

Function : To specify a reference.
Segment number : 21

	EDIFACT	EAN	*	Description
C506 REFERENCE	M	M		
1153 Reference qualifier	M an..3	M		AAK = Despatch advice number AAU = Despatch note number ALO = Receiving advice number CR = Customer reference number ON = Order number (buyer) POR = Purchase order response number PP = Purchase order change number VN = Order number (supplier)
1154 Reference number	C an..35	R		
1156 Line number	C an..6	O		
4000 Reference version number	C an..35	N		

Segment Notes.

This segment is used to specify any references associated with the current line item.

Example :

RFF+AAK:63321'

SG16 - C	9999 -	CPS-SG17-SG22
SG22 - C	9999 -	LIN-PIA-QTY-QVR-DTM-SG28-SG29
SG28 - C	10 -	RFF-DTM
DTM - C	1 -	Date/time/period

Function : To specify date, and/or time, or period.
Segment number : 22

	EDIFACT	EAN	*	Description
C507 DATE/TIME/PERIOD	M	M		
2005 Date/time/period qualifier	M an..3	M	*	171 = Reference date/time
2380 Date/time/period	C an..35	R		
2379 Date/time/period format qualifier	C an..3	R		102 = CCYYMMDD

Segment Notes.

This segment is used to specify dates related to the references given in the previous RFF segment.

Example :

DTM+171:19971115:102'

© Copyright EAN 1997

SG16 - C	9999 -	CPS-SG17-SG22
SG22 - C	9999 -	LIN-PIA-QTY-QVR-DTM-SG28-SG29
SG29 - C	9999 -	PCI-QTY-QVR-SG31

PCI - M 1 - Package identification

Function : To specify markings and labels on individual packages or physical units.
Segment number : 23

	EDIFACT	EAN	*	Description
4233 Marking instructions, coded	C an..3	O		17 = Supplier's instructions 33E = Marked with serial shipping container code (EAN Code)
C210 MARKS & LABELS	C	O		
7102 Shipping marks	M an..35	M		
7102 Shipping marks	C an..35	O		
7102 Shipping marks	C an..35	O		
7102 Shipping marks	C an..35	O		
7102 Shipping marks	C an..35	O		
7102 Shipping marks	C an..35	O		
7102 Shipping marks	C an..35	O		
7102 Shipping marks	C an..35	O		
7102 Shipping marks	C an..35	O		
7102 Shipping marks	C an..35	O		
8275 Container/package status, coded	C an..3	N		
C827 TYPE OF MARKING	C	N		
7511 Type of marking, coded	M an..3			
1131 Code list qualifier	C an..3			
3055 Code list responsible agency, coded	C an..3			

Segment Notes.

This segment is used to provide markings and labels information relevant to the product identified in the LIN segment.

Example :

PCI+17'

© Copyright EAN 1997

SG16 - C	9999 -	CPS-SG17-SG22
SG22 - C	9999 -	LIN-PIA-QTY-QVR-DTM-SG28-SG29
SG29 - C	9999 -	PCI-QTY-QVR-SG31
QTY - C	1 -	Quantity

Function : To specify a pertinent quantity.
Segment number : 24

	EDIFACT	EAN	*	Description
C186 QUANTITY DETAILS	M	M		
6063 Quantity qualifier	M an..3	M	*	194 = Received and accepted
6060 Quantity	M n..15	M		
6411 Measure unit qualifier	C an..3	D		

Segment Notes.

This segment is used to indicate the quantity of the current line item received and accepted which is contained in the package marked with the Serial Shipping Container Code identified in the following GIN segment.

Example :

QTY+194:45'

Dependency Note :

DE 6411: This DE is only used if the current product is of variable quantity.

SG16 - C	9999 -	CPS-SG17-SG22
SG22 - C	9999 -	LIN-PIA-QTY-QVR-DTM-SG28-SG29
SG29 - C	9999 -	PCI-QTY-QVR-SG31
QVR - C	1 -	Quantity variances

Function : To specify item details relating to quantity variances.

Note: This segment replaces segment QVA (which has been deleted in this directory).

Segment number : 25

		EDIFACT	EAN	*	Description
C279	**QUANTITY DIFFERENCE INFORMATION**	C	R		
6064	Quantity difference	M n..15	M		Specify the actual variance amount here.
6063	Quantity qualifier	C an..3	R		12 = Despatch quantity 21 = Ordered quantity 46 = Delivered quantity 195 = Received, not accepted, to be returned 196 = Received, not accepted, to be destroyed
4221	**Discrepancy, coded**	C an..3	O		AC = Over-shipped AE = Delivered but not advised AF = Goods delivered damaged AG = Delivered too late BP = Shipment partial - back order to follow CP = Shipment partial - considered complete, no backorder
C960	**REASON FOR CHANGE**	C	O		
4295	Change reason, coded	C an..3	R		AT = Item not ordered AUE = Article code unknown (EAN Code) BN = Bar code not readable (EAN Code) DME = Damaged (EAN Code) IS = Item represents substitution from original order (EAN Code) PC = Pack difference PE = Minimum/maximum product durability date unacceptable (EAN Code)
1131	Code list qualifier	C an..3	O		
3055	Code list responsible agency, coded	C an..3	O		
4294	Change reason	C an..35	O		

Segment Notes.

This segment is used to specify quantity variances for the current line item which is contained in the package marked with the Serial Shipping Container Code identified in the following GIN segment.

For negative values (e.g. damaged goods not accepted) the variance must be expressed as negative.

© Copyright EAN 1997

SG29 - C	9999 -	PCI-QTY-QVR-SG31
QVR - C	1 -	Quantity variances

Function : To specify item details relating to quantity variances.

Note: This segment replaces segment QVA (which has been deleted in this directory).

Segment number : 25

DE 6064 and 6063: These DE's must be used to indicate the quantity not being accepted which is the difference between the despatched (delivered) quantity and the received and accepted quantity.

Example :

QVR+40:195+AC'

SG16 - C	9999 -	CPS-SG17-SG22
SG22 - C	9999 -	LIN-PIA-QTY-QVR-DTM-SG28-SG29
SG29 - C	9999 -	PCI-QTY-QVR-SG31
SG31 - C	10 -	GIN
GIN - M	1 -	Goods identity number

Function : To give specific identification numbers, either as single numbers or ranges.
Segment number : 26

		EDIFACT	EAN	*	Description
7405	**Identity number qualifier**	M an..3	M		BJ = Serial shipping container code
C208	**IDENTITY NUMBER RANGE**	M	M		
7402	Identity number	M an..35	M		
7402	Identity number	C an..35	O		
C208	**IDENTITY NUMBER RANGE**	C	O		
7402	Identity number	M an..35	M		
7402	Identity number	C an..35	O		
C208	**IDENTITY NUMBER RANGE**	C	O		
7402	Identity number	M an..35	M		
7402	Identity number	C an..35	O		
C208	**IDENTITY NUMBER RANGE**	C	O		
7402	Identity number	M an..35	M		
7402	Identity number	C an..35	O		
C208	**IDENTITY NUMBER RANGE**	C	O		
7402	Identity number	M an..35	M		
7402	Identity number	C an..35	O		

Segment Notes.

This segment is used to provide the Serial Shipping Container Code marked on the packaging of the current line item.

DE C208: If a sequential series of identity numbers is provided (e.g., 1 up to and including 10) only one repetition of the C208 composite is needed with the first repetition of 7402 specifying the numerically smaller identity number
(e.g., 1) and the second repetition the larger identity number (e.g., 10). If identity numbers are not sequential and part of a series (e.g., 1, 3, and 10) then a separate C208 and DE 7402 must be used for each identity number.

Within internal applications, users may provide a range of Serial Shipping Container Codes using one repetition of C208 (as described above) by transmitting a 17 digit SSCC and calculating the check digit within the application. The full 18 digit Serial Shipping Container Code (not in sequence due to check digit algorithm) must be transmitted using a separate C208 composite in open trade applications.

In EANCOM it is recommended to use the Serial Shipping Container Code (SSCC) for unique identification of individual transport packages.

Example :

© Copyright EAN 1997

SG31 - C	10 -	GIN
GIN - M	1 -	Goods identity number
Function :		To give specific identification numbers, either as single numbers or ranges.
Segment number : 26		
GIN + BJ + 354123450000000014'		

CNT - C 1 -	Control total			
Function :	To provide control total.			
Segment number : 27				
	EDIFACT	EAN	*	Description
C270 CONTROL	M	M		
6069 Control qualifier	M an..3	M	*	2 = Number of line items in message
6066 Control value	M n..18	M		
6411 Measure unit qualifier	C an..3	O		

Segment Notes.

This segment is used to provide message control information for checking on the message receivers in-house system.

Example :

CNT+2:120'

© Copyright EAN 1997

UNT - M 1 -	MESSAGE TRAILER
Function :	To end and check the completeness of a message.
Segment number : 28	

	EDIFACT	EAN	*	Description
0074 Number of segments in a message	M n..6	M		The total number of segments in the message is detailed here.
0062 Message reference number	M an..14	M		The message reference numbered detailed here should equal the one specified in the UNH segment.

Segment Notes.

This segment is a mandatory UN/EDIFACT segment. It must always be the last segment in the message.

Example :

UNT + 29 + ME000001'

Examples A - G of the Receiving Advice Message

The following examples illustrate different scenarios for the Receiving Advice message

Example A: Receiving Advice Confirming Reception and Acceptance of Complete Shipment

EXAMPLE	ORDERED/ CONFIRMED ORDERS/ORDRSP - LIN	DESPATCHED DESADV - LIN Despatch note	RECEIVED AND ACCEPTED RECADV - LIN	VARIANCES/REASONS/ ACTIONS RECADV - QVR
A	100	100	100	-

The following is an example of a Receiving Advice message providing a confirmation of the reception of a shipment. The Receiving Advice is sent by the buyer of goods identified by the EAN location number 5412345000013 to the supplier identified by the EAN location number 5410738100005.

The Receiving Advice with reference REC5488 is sent the 11 March 1997. The goods were received 25 February 1997 in reference to the buyer's Purchase Order number PO12345 dated 20 February 1997 and the supplier's Despatch Advice number DA45601 dated 25 February 1997.

The Receiving Advice confirms the reception and acceptance of the whole shipment. No detailed information on the shipment contents is provided.

Message A:

UNH+ME000001+RECADV:D:96A:UN:EAN003'	Message header
BGM+352::9+REC5488+9'	Receiving advice number REC5488
DTM+137:19970311:102'	Message date 11th of March 1997
DTM+50:19970225:102'	Goods receipt date 25th of February 1997
RFF+AAK:DA45601'	Receipt relates to despatch advice number DA45601
DTM+171:19970225:102'	Despatch advice date 25th of February 1997
RFF+ON:PO12345'	Receipt relates to buyer’s order number PO12345
DTM+171:19970220:102'	Order date 20th of February 1997
NAD+BY+5412345000013::9'	Buyer identified by the EAN location number 5412345000013
RFF+VA:1452216'	Buyer’s VAT number 1452216
NAD+SU+5410738100005::9'	Supplier identified by the EAN location number 5410738100005
RFF+VA:5448776'	Supplier’s VAT number 5448776
UNT+13+ME000001'	Message trailer - 13 segments in message

Example B: Receiving Advice Message Informing of Damaged Goods

EXAMPLE	ORDERED/ CONFIRMED ORDERS/ORDRSP - LIN	DESPATCHED DESADV - LIN Despatch note	RECEIVED AND ACCEPTED RECADV - LIN	VARIANCES/REASONS /ACTIONS RECADV - QVR
B	100	100	95	- 100 delivered, shipment damaged, quantity difference 5

The following is an example of a Receiving Advice message providing the receiving details for a shipmentThe Receiving Advice is sent by the buyer of goods identified by the EAN location number 5412345000013 to the supplier identified by the EAN location number 5410738100005The Receiving Advice with reference REC5490 is sent the 11 March 1997The goods were received 10 March 1997 in reference to the buyer's Purchase Order number PO12345 dated 1 March 1997 and the supplier's Despatch Advice number DA45601 dated 10 March 1997.

The trading partners have specified beforehand within the Interchange Agreement what actions will be taken with respect to common occurring discrepancies between ordered/despatched quantities and quantities received and acceptedBoth trading partners have agreed and know what actions should be taken in such circumstancesIn this scenario, the Receiving Advice message is used as a status report, with the required actions being agreed outside the EDI environment.

The Receiving Advice confirms the receipt and acceptance of 95 units of product 5410738000169 and informs that 100 units were delivered and that 5 units were delivered damaged(The trading partners have agreed that in such a case, the units will be destroyedThis action is agreed beforehand and is not indicated within the Receiving Advice.)

Message B:

UNH+ME000001+RECADV:D:96A:UN:EAN003'	Message header
BGM+352::9+REC5490+9'	Receiving advice number REC5490
DTM+137:19970311:102'	Message date 11th of March 1997
DTM+50:19970310:102'	Goods receipt date 10th of March 1997
RFF+AAK:DA45601'	Receipt relates to despatch advice number DA45601
DTM+171:19970310:102'	Despatch advice date 10th of March 1997
RFF+ON:PO12345'	Receipt relates to buyer’s order number PO12345
DTM+171:19970301:102'	Date of order 1st of March 1997
NAD+BY+5412345000013::9'	Buyer identified by the EAN location number 5412345000013
RFF+VA:1452216'	Buyer’s VAT number is 1452216
NAD+SU+5410738100005::9'	Supplier identified by the EAN location number 5410738100005
RFF+VA:5448776'	Supplier’s VAT number 5448776
CPS+1'	Consignment packing sequence 1
LIN+1++5410738000169:EN'	Received product identified by the EAN article number 5410738000169

QTY + 194:95'	Received and accepted quantity 95
QTY + 12:100'	Despatched quantity 100
QVR + -5:196 + AF'	Quantity variance of minus 5 (difference between despatched and received/accepted quantities) because goods delivered damaged which will be destroyed
UNT + 18 + ME000001'	Message trailer - 18 segments in the message

Example C: Receiving Advice Message Informing of Damaged Goods to Be Destroyed

EXAMPLE	ORDERED/ CONFIRMED ORDERS/ORDRSP - LIN	DESPATCHED DESADV - LIN Despatch note	RECEIVED AND ACCEPTED RECADV - LIN	VARIANCES/REASONS /ACTIONS RECADV - QVR
C	100	100	95	-5 Damaged - destroy

The following is an example of a Receiving Advice message providing the receiving details for a shipmentThe Receiving Advice is sent by the buyer of goods identified by the EAN location number 5412345000013 to the supplier identified by the EAN location number 5410738100005.

The Receiving Advice with reference RA000001 is sent the 11 March 1997The goods were received 10 March 1997 in reference to the buyer's Purchase Order number PO12345 dated 1 March 1997 and the supplier's Despatch Advice number DA45601 dated 10 March 1997.

The Receiving Advice confirms the receipt and acceptance of 95 units of product 5410738000169 and rejects 5 units delivered damaged and which will be destroyed.

Message C:

UNH + ME000001 + RECADV:D:96A:UN:EAN003'	Message header
BGM + 352::9 + RA000001 + 9'	Receiving advice number RA000001
DTM + 137:19970311:102'	Message date 11th of March 1997
DTM + 50:19970310:102'	Goods received date 10th of March 1997
RFF + AAK:DA45601'	Receipt relates to despatch advice number DA45601
DTM + 171:19970310:102'	Despatch advice date 10th of March 1997
RFF + ON:PO12345'	Receipt relates to buyer’s order number PO12345
DTM + 171:19970301:102'	Date of order 1st of March 1997
NAD + BY + 5412345000013::9'	Buyer identified by the EAN location number 5412345000013
RFF + VA:1452216'	Buyer’s VAT number is 1452216
NAD + SU + 5410738100005::9'	Supplier identified by the EAN location number 5410738100005
RFF + VA:5448776'	Supplier’s VAT number 5448776
CPS + 1'	Consignment packing sequence 1
LIN + 1 + + 5410738000169:EN'	Received product identified by the EAN article number 5410738000169
QTY + 194:95'	Received and accepted quantity 95

QTY + 21:100'	Ordered quantity 100
QVR + -5:196 + AF'	Quantity variance of minus 5 (difference between ordered and received/accepted quantities) because goods delivered damaged which will be destroyed
UNT + 18 + ME000001'	Message trailer - 18 segments in the message

Example D: Receiving Advice Informing of Damaged Goods to be Destroyed, Back Order Confirmed

EXAMPLE	ORDERED/ CONFIRMED ORDERS/ORDRSP - LIN	DESPATCHED DESADV - LIN Despatch note	RECEIVED AND ACCEPTED RECADV - LIN	VARIANCES/REASONS /ACTIONS RECADV - QVR
D	100	85	83	-2 Damaged - destroy

The following is an example of a Receiving Advice message providing the receiving details for a shipmentThe Receiving Advice is sent by the buyer of goods identified by the EAN location number 5412345000013 to the supplier identified by the EAN location number 5410738100005.

The Receiving Advice with reference RA000001 is sent the 11 March 1997The goods were received 10 March 1997 in reference to the buyer's Purchase Order number PO12345 dated 1 March 1997 and the supplier's Despatch Advice number DA45601 dated 10 March 1997.

The Receiving Advice confirms the receipt and acceptance of 83 units of product 5410738000169 and rejects 2 units delivered damaged and which will be destroyedA back order for 15 units was confirmed previous to the despatch of goods.

Message D:

UNH + ME000001 + RECADV:D:96A:UN:EAN003'	Message header
BGM + 352::9 + RA000001 + 9'	Receiving advice number RA000001
DTM + 137:19970311:102'	Message date 11th of March 1997
DTM + 50:19970310:102'	Goods received date 10th of March 1997
RFF + AAK:DA45601'	Receipt relates to despatch advice number DA45601
DTM + 171:19970310:102'	Despatch advice date 10th of March 1997
RFF + ON:PO12345'	Receipt relates to buyer’s order number PO12345
DTM + 171:19970301:102'	Date of order 1st of March 1997
NAD + BY + 5412345000013::9'	Buyer identified by the EAN location number 5412345000013
RFF + VA:1452216'	Buyer’s VAT number is 1452216
NAD + SU + 5410738100005::9'	Supplier identified by the EAN location number 5410738100005
RFF + VA:5448776'	Supplier’s VAT number 5448776
CPS + 1'	Consignment packing sequence 1
LIN + 1 + + 5410738000169:EN'	Received product identified by the EAN article number 5410738000169

QTY + 194:83'	Received and accepted quantity 83
QTY + 46:85’	Delivered quantity 85
QTY + 21:100'	Ordered quantity 100
QVR + -2:196 + AF'	First quantity variance of minus 2 (difference between ordered and received/accepted quantities) is because goods delivered damaged which will be destroyed
QVR + -15:85 + BP'	Second quantity variance of minus 15 (difference between ordered and delivered quantities) is because of a short delivery for which a back order will follow
UNT + 20 + ME000001’	Message trailer - 20 segments in the message

Example E: Receiving Advice Changing Back Order Status

EXAMPLE	ORDERED/ CONFIRMED ORDERS/ORDRSP - LIN	DESPATCHED DESADV - LIN Despatch note	RECEIVED AND ACCEPTED RECADV - LIN	VARIANCES/REASONS /ACTIONS RECADV - QVR
E	100	85	85	-15 Back ordered

The following is an example of a Receiving Advice message providing the receiving details for a shipmentThe Receiving Advice is sent by the buyer of goods identified by the EAN location number 5412345000013 to the supplier identified by the EAN location number 5410738100005.

The Receiving Advice with reference RA000001 is sent the 11 March 1997The goods were received 10 March 1997 in reference to the buyer's Purchase Order number PO12345 dated 1 March 1997 and the supplier's Despatch Advice number DA45601 dated 10 March 1997.

The Receiving Advice confirms the receipt and acceptance of 85 units of product 5410738000169 and informs that the other 15 units on back order should be cancelled if not delivered by 28 March 1997The Receiving Advice affects the status of an outstanding order line.

Message E:

UNH + ME000001 + RECADV:D:96A:UN:EAN003'	Message header
BGM + 352::9 + RA000001 + 9'	Receiving advice number RA000001
DTM + 137:19970311:102'	Message date 11th of March 1997
DTM + 50:19970310:102'	Goods received date 10th of March 1997
RFF + AAK:DA45601'	Receipt relates to despatch advice number DA45601
DTM + 171:19970310:102'	Despatch advice date 10th of March 1997
RFF + ON:PO12345'	Receipt relates to buyer’s order number PO12345
DTM + 171:19970301:102'	Date of order 1st of March 1997
NAD + BY + 5412345000013::9'	Buyer identified by the EAN location number 5412345000013
RFF + VA:1452216'	Buyer’s VAT number is 1452216

NAD + SU + 5410738100005::9'	Supplier identified by the EAN location number 5410738100005
RFF + VA:5448776'	Supplier's VAT number 5448776
CPS + 1'	Consignment packing sequence 1
LIN + 1 + + 5410738000169:EN'	Received product identified by the EAN article number 5410738000169
QTY + 194:85'	Received and accepted quantity 85
QTY + 21:100'	Ordered quantity 100
QVR + -15:83 + BP'	Quantity variance of minus 15 (difference between ordered and received/ accepted quantities) for which a back order will follow
DTM + 61:19970328:102'	Back order is to be cancelled if not delivered by the 28th of March 1997
UNT + 19 + ME000001	Message trailer - 19 segments in the message

Example F: Receiving Advice Rejecting Excess Shipment (Goods Returned)

EXAMPLE	ORDERED/ CONFIRMED ORDERS/ORDRSP - LIN	DESPATCHED DESADV - LIN Despatch note	RECEIVED AND ACCEPTED RECADV - LIN	VARIANCES/REASONS /ACTIONS RECADV - QVR
F	100	120	100	20 Excess delivery, return

The following is an example of a Receiving Advice message providing the receiving details for a shipmentThe Receiving Advice is sent by the buyer of goods identified by the EAN location number 5412345000013 to the supplier identified by the EAN location number 5410738100005.

The Receiving Advice with reference RA000001 is sent the 11 March 1997The goods were received 10 March 1997 in reference to the buyer's Purchase Order number PO12345 dated 1 March 1997 and the supplier's Despatch Advice number DA45601 dated 10 March 1997.

The Receiving Advice confirms the receipt and acceptance of 100 units of product 5410738000169 and rejects the reception of 20 additional units which were delivered in excessThe excess delivery will be returned to the supplier who will have to collect the goods on 28 March 1997.

Message F:

UNH + ME000001 + RECADV:D:96A:UN:EAN003'	Message header
BGM + 352::9 + RA000001 + 9'	Receiving advice number RA000001
DTM + 137:19970311:102'	Message date 11th of March 1997
DTM + 50:19970310:102'	Goods received date 10th of March 1997
RFF + AAK:DA45601'	Receipt relates to despatch advice number DA45601
DTM + 171:19970310:102'	Despatch advice date 10th of March 1997

RFF+ON:PO12345'	Receipt relates to buyer's order number PO12345
DTM+171:19970301:102'	Date of order 1st of March 1997
NAD+BY+5412345000013::9'	Buyer identified by the EAN location number 5412345000013
RFF+VA:1452216'	Buyer's VAT number is 1452216
NAD+SU+5410738100005::9'	Supplier identified by the EAN location number 5410738100005
RFF+VA:5448776'	Supplier's VAT number 5448776
CPS+1'	Consignment packing sequence 1
LIN+1++5410738000169:EN'	Received product identified by the EAN article number 5410738000169
QTY+194:120'	Received and accepted quantity 120
QTY+21:100'	Ordered quantity 100
QVR+20:195+AC'	Quantity variance of plus 20 are to be returned due to over delivery
DTM+200:19970328:102'	Excess goods should be collected by the 28th of March 1997
UNT+19+ME000001	Message trailer - 19 segments in the message

Example G: Receiving Advice Informing of Unknown Shipped Goods

EXAMPLE	ORDERED/ CONFIRMED ORDERS/ORDRSP - LIN	DESPATCHED DESADV - LIN Despatch note	RECEIVED AND NOT ACCEPTED RECADV - LIN	VARIANCES/REASONS /ACTIONS RECADV - QVR
G	100	100	100	Excess delivery, unknown pallet received - return

The following is an example of a Receiving Advice message providing the receiving details for a shipmentThe Receiving Advice is sent by the buyer of goods identified by the EAN location number 5412345000013 to the supplier identified by the EAN location number 5410738100005.

The Receiving Advice with reference RA000001 is sent the 11 March 1997The goods were received 10 March 1997 in reference to the buyer's Purchase Order number PO12345 dated 1 March 1997 and the supplier's Despatch Advice number DA45601 dated 10 March 1997.

The Receiving Advice notifies the supplier of the receipt of 100 units of product 5410738000169 which are unknown (not ordered)These products were delivered on the pallet with the Serial Shipping Container Code 354107380000000019.

Message G:

UNH+ME000001+RECADV:D:96A:UN:EAN003'	Message header
BGM+352::9+RA000001+9'	Receiving advice number RA000001
DTM+137:19970311:102'	Message date 11th of March 1997

DTM+50:19970310:102'	Goods receipt date 10th of March 1997
RFF+AAK:DA45601'	Receipt relates to despatch advice number DA45601
DTM+171:19970310:102'	Despatch advice date 10th of March 1997
RFF+ON:PO12345'	Receipt relates to buyer's order number PO12345
DTM+171:19970301:102'	Date of order 1st of March 1997
NAD+BY+5412345000013::9'	Buyer identified by the EAN location number 5412345000013
RFF+VA:1452216'	Buyer's VAT number is 1452216
NAD+SU+5410738100005::9'	Supplier identified by the EAN location number 5410738100005
RFF+VA:5448776'	Supplier's VAT number 5448776 delivery
CPS+1'	Consignment packing sequence 1
PAC+1++201'	One ISO 1 pallet
PCI+33E'	Pallet marked with Serial Shipping Container Code
GIN+BJ+354107380000000019'	Serial Shipping Container Code 354107380000000019
LIN+1++5410738000169:EN'	Received product identified by the EAN article number 5410738000169
QTY+194:0'	Received and accepted quantity 0
QTY+46:100'	Delivered quantity 100
QVR+100:195++AT'	Quantity variance of plus 100 are to be returned due to being never ordered
UNT+21+ME000001	Message trailer - 21 segments in the message

Note: The EDI interchange will include the UNB..UNZ segments and, if applicable, the UNG..UNE segments (see part I, section 2.7).

* * *