THE ARRIVAL NOTICE MESSAGE

1. Introduction

* Status

MESSAGE TYPE	: IFTMAN
REFERENCE DIRECTORY	: D.96A
EANCOM SUBSET VERSION	: 001

* Definition

A message from the party providing forwarding and/or transport services, to the party such as has been indicated in the contract, giving notice and details of the arrival of a consignment. In addition the message may be sent by the consignee to provide proof of delivery for a carrier.

* Principles

The message is a single consignment message which can be used by all modes of transport for the forwarding and transport of goods from any origin to any destination, regardless of route or prevailing commercial practice.

The arrival notice is intended to provide arrival information to the notify party at the place of destination of the transport. A notify party might be the consignee or his agent or the customs broker depending on the custom of the port or the conditions in the contract. A copy of the arrival notice may be sent to the consignor for information purposes.

One arrival notice message should always equal one consignment.

In addition to the main principles detailed above, a number of general principles also apply;

- A consignment may contain several goods items.
- A consignment is identified by a consignors reference number (code CU) qualified in the RFF segment.
- Goods items may or may not be containerised.
- Goods items may be transported in one or more containers, and a single container may contain one or more goods items.
- One goods item may be related to one or more customs tariff codes.
- Goods items related to one customs tariff code may be carried in one or more containers.
- The arrival notice message may also be used by a consignee to provide proof of delivery for a carrier.

© Copyright EAN 1997

- Transport devices, which have the ability of powered movement on their own, are specified in the transport details group. Other load or transport devices are specified as equipment.

- Packaging for goods items can be expressed at up to three levels.

- A goods item consists of one or more despatch units that adhere to the same package type and goods description.

- A despatch unit is the unit of cargo that will be handled and to which an SSCC can be affixed.

A number of generic transport terms are used in this specification, to be described as:

* **CONSIGNEE**
  the organisation (party) which has the intention to receive the goods.

* **CONSIGNOR**
  the party ordering transport, orders a carrier to collect goods for transportation.

* **CONSIGNMENT**
  a collection of goods items to be transported from one or many despatch locations to one or many delivery locations. (synonym: shipment).

* **CARRIER**
  the party contracted by the consignor or forwarder to transport goods.

* **DESPATCH LOCATION**
  the physical location from which goods for transport are shipped.

* **DELIVERY LOCATION**
  the physical location to which goods for transport are finally delivered.

* **EQUIPMENT**
  material resources necessary to facilitate the transport and handling of cargo. Transport equipment does under the given circumstances not have the ability to move by its own propulsion (e.g. sea container, trailer, unit load device, pallet).

* **FORWARDER**
  the party contracted by the consignor to arrange to have the goods transported.

* **GOODS ITEM**
  a collection of products normally grouped together for transport purposes, e.g. 12 pallets of foodstuffs.

* **LINE ITEM**
  a specific product identified and defined for trade purposes, e.g. a case of flour containing 24 packets of 250 grams.

© Copyright EAN 1997

THE ARRIVAL NOTICE

* **MODE OF TRANSPORT**
  the method of transport used for the conveyance of goods or persons, e.g. by rail, by road, by sea.

* **MEANS OF TRANSPORT**
  the vehicle used for the transport of goods or persons, e.g. aircraft, truck, vessel.

* **NOTIFY PARTY**
  the party to be notified of the arrival of goods.

* **PLACE OF ACCEPTANCE**
  the place at which the responsibility of the carrier starts.

* **PLACE OF DELIVERY**
  the place at which the responsibility of the carrier ends.

* **TYPE OF MEANS OF TRANSPORT**
  the type of vehicle used in the transport process, e.g. wide body, tank truck, passenger vessel.

* **TYPE OF EQUIPMENT**
  the type of material used, e.g. 40 feet container, four way pallet, mafi trailer.

* * *

© Copyright EAN 1997

2. Message Structure Chart

Arrival Notice Heading Section

UNH	1	M	1	MESSAGE HEADER
BGM	2	M	1	Beginning of message
DTM	3	C	9	Date/time/period
TSR	4	C	9	Transport service requirements
MOA	5	C	99	Monetary amount
FTX	6	C	99	Free text
CNT	7	C	9	Control total
SG1		C	99	LOC
LOC	8	M	1	Place/location identification
SG3		C	99	RFF-DTM
RFF	9	M	1	Reference
DTM	10	C	9	Date/time/period
SG8		C	99	TDT-DTM-SG9
TDT	11	M	1	Details of transport
DTM	12	C	9	Date/time/period
SG9		C	99	LOC
LOC	13	M	1	Place/location identification
SG11		C	99	NAD-SG12-SG15
NAD	14	M	1	Name and address
SG12		C	9	CTA-COM
CTA	15	M	1	Contact information
COM	16	C	9	Communication contact
SG15		C	9	RFF
RFF	17	M	1	Reference

Arrival Notice Detail Section

SG18		C	999	GID-TMP-RNG-FTX-SG19-SG20-SG21-SG22-SG23-SG27-SG30
GID	18	M	1	Goods item details
TMP	19	C	1	Temperature
RNG	20	C	1	Range details
FTX	21	C	9	Free text
SG19		C	9	NAD-DTM
NAD	22	M	1	Name and address
DTM	23	C	1	Date/time/period
SG20		C	99	MEA-EQN
MEA	24	M	1	Measurements
EQN	25	C	1	Number of units
SG21		C	99	DIM-EQN
DIM	26	M	1	Dimensions
EQN	27	C	1	Number of units

© Copyright EAN 1997

THE ARRIVAL NOTICE

SG22		C	9	RFF
RFF	28	M	1	Reference
SG23		C	9	PCI-GIN
PCI	29	M	1	Package identification
GIN	30	C	9	Goods identity number
SG27		C	999	SGP
SGP	31	M	1	Split goods placement
SG30		C	9	DGS-FTX-SG31-SG32
DGS	32	M	1	Dangerous goods
FTX	33	C	99	Free text
SG31		C	9	CTA-COM
CTA	34	M	1	Contact information
COM	35	C	9	Communication contact
SG32		C	9	MEA-EQN
MEA	36	M	1	Measurements
EQN	37	C	1	Number of units
SG35		C	999	EQD-MEA-DIM-SEL-SG37
EQD	38	M	1	Equipment details
MEA	39	C	9	Measurements
DIM	40	C	9	Dimensions
SEL	41	C	99	Seal number
SG37		C	9	NAD
NAD	42	M	1	Name and address

Arrival Notice Detail Section

UNT	43	M	1	MESSAGE TRAILER

* * *

© Copyright EAN 1997

3. Branching Diagram

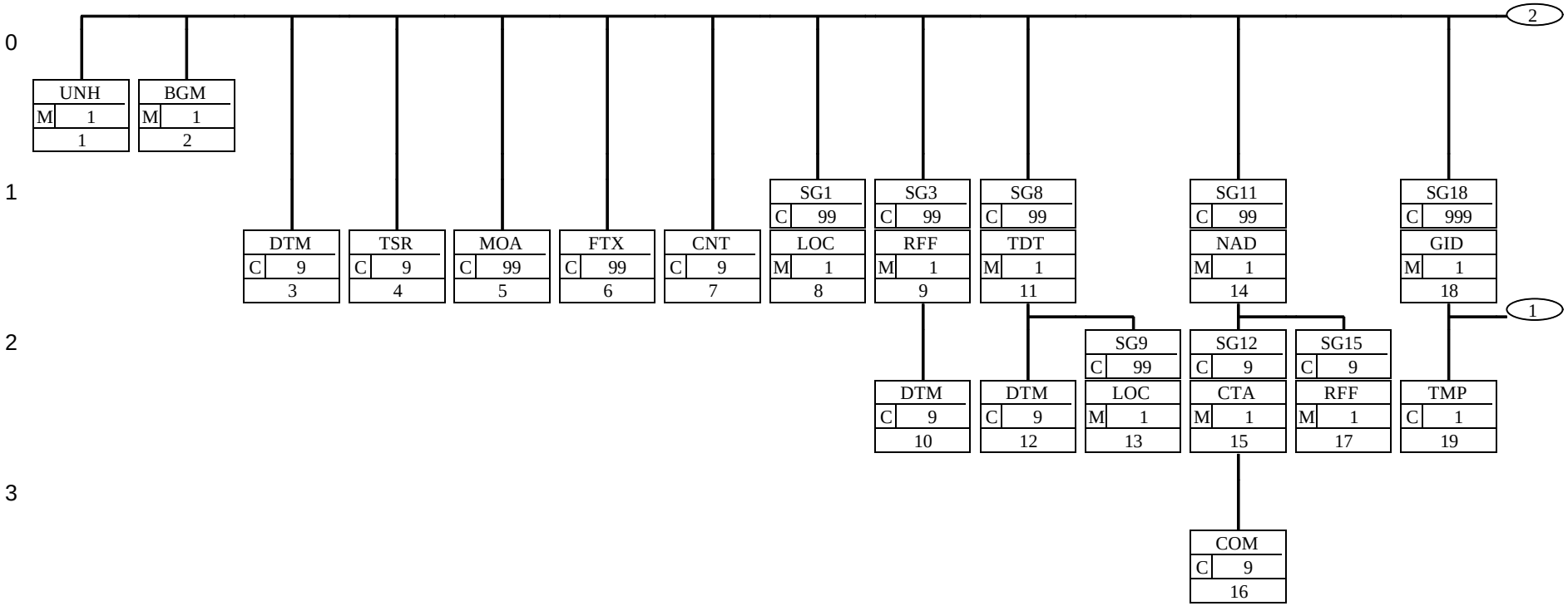

THE ARRIVAL NOTICE

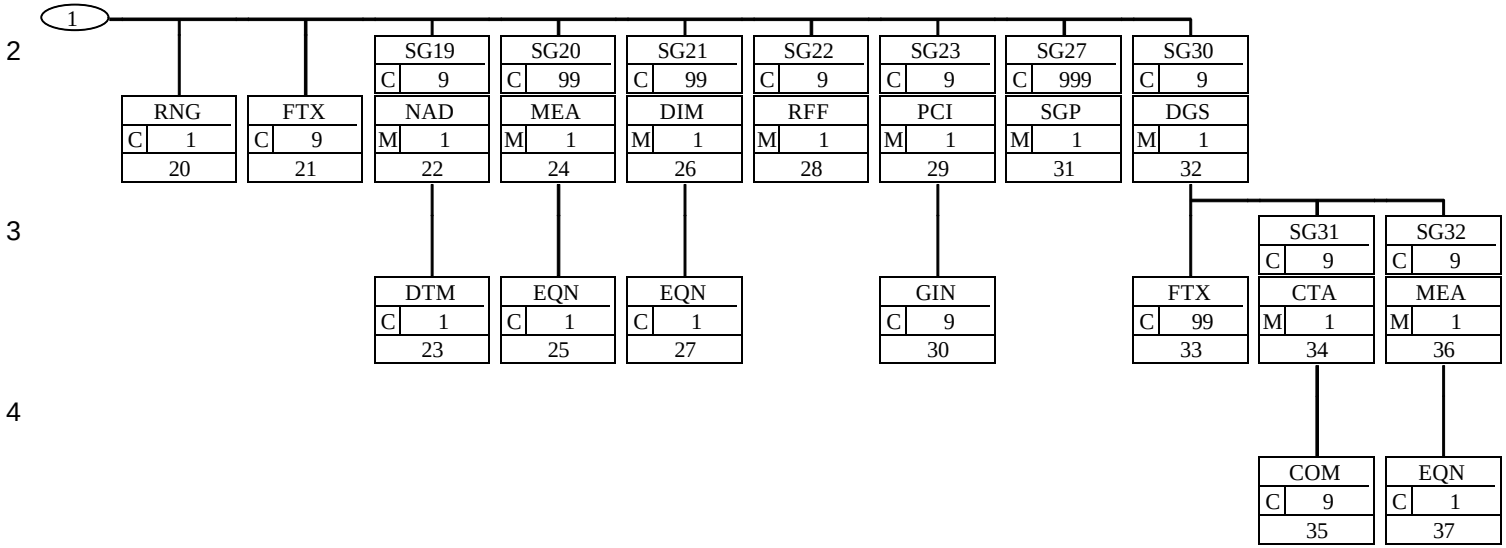

© Copyright EAN 1997

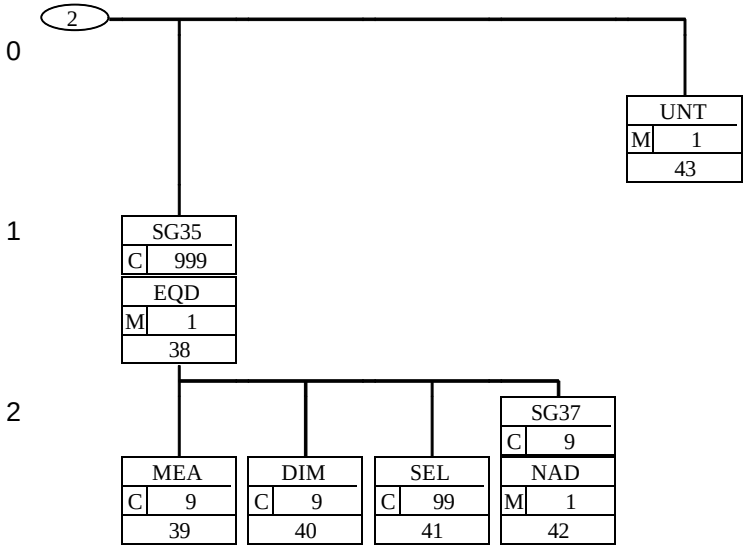
2
0
UNT
M 1
43
1
SG35
C 999
EQD
M 1
38
2
SG37
C 9
MEA
C 9
39
DIM
C 9
40
SEL
C 99
41
NAD
M 1
42

4. Segments Description

Arrival Notice Heading Section

UNH - M 1 - MESSAGE HEADER
This segment is used to head, identify and specify a message.

BGM - M 1 - Beginning of message
This segment is used to indicate the type and function of a message and to transmit the identifying number.

DTM - C 9 - Date/time/period
This segment is used to specify any dates related to the arrival notice message.

TSR - C 9 - Transport service requirements
This segment is used to indicate the party responsible for the unloading of the goods from the transport means at the arrival location.

MOA - C 99 - Monetary amount
This segment is used to specify monetary values related to the arriving consignment.

FTX - C 99 - Free text
This segment is used to provide free form or coded text information related to the entire message.

CNT - C 9 - Control total
This segment is used to provide application data for message control purposes.

SG1 - C 99 - LOC
A group of segments to specify locations related to the entire message, e.g. place of transhipment.

LOC - M 1 - Place/location identification
This segment is used to identify any locations related to the complete arriving consignment.

SG3 - C 99 - RFF-DTM
A group of segments containing a reference and constants which apply to the entire message.

RFF - M 1 - Reference
This segment is used to specify references relating to the consignment arriving.

DTM - C 9 - Date/time/period
This segment is used to specify any dates related to the previous RFF segment.

SG8 - C 99 - TDT-DTM-SG9
A group of segments to indicate details of the movement of goods such as mode and means of transport, locations, departure, and arrival date(s) and time(s).

© Copyright EAN 1997

TDT - M 1 - Details of transport
This segment is used to indicate the main carriage transport means, and where necessary, the exact identification of the transport used for the arriving consignment.

DTM - C 9 - Date/time/period
This segment is used to specify any dates relating to the transport specified in the previous TDT segment.

SG9 - C 99 - LOC
A segment group to specify a location and date/time related to this leg of transport.

LOC - M 1 - Place/location identification
This segment is used to identify any locations related to the transport details previously specified.

SG11 - C 99 - NAD-SG12-SG15
A group of segments to identify a party, related references and contacts for the complete message.

NAD - M 1 - Name and address
This segment is used to identify the parties involved in the arrival notice message. Identification of the consignor and/or consignee, and/or the carrier or forwarder is mandatory in the arrival notice message.

SG12 - C 9 - CTA-COM
A group of segments identifying a contact and its communications related to the party.

CTA - M 1 - Contact information
This segment is used to identify department and contact names within the company specified in the NAD segment.

COM - C 9 - Communication contact
This segment identifies the communications number and type of communications for the person or department identified in the preceding CTA segment.

SG15 - C 9 - RFF
A segment group to specify a reference related to the party.

RFF - M 1 - Reference
This segment is used to identify any references related to the party identified in the NAD segment.

Arrival Notice Detail Section

SG18 - C 999 - GID-TMP-RNG-FTX-SG19-SG20-SG21-SG22-SG23-SG27-SG30
A group of segments to describe the goods items for which transport is undertaken.

GID - M 1 - Goods item details
This segment is the trigger segment for the detail section of the arrival notice message. It is used to specify the type of packaging for the goods item(s) which are contained in the arriving consignment.

TMP - C 1 - Temperature
This segment is used to specify transport temperature settings related to the current goods item.

RNG - C 1 - Range details
This segment is used to specify transport temperature ranges related to the goods item.

FTX - C 9 - Free text
This segment is used to provide free form or coded text information related to the entire message.

SG19 - C 9 - NAD-DTM
A group of segments to identify different places of collection and/or delivery for the goods item.

NAD - M 1 - Name and address
This segment is used to specify the place of delivery for the current goods item.

DTM - C 1 - Date/time/period
This DTM segment is used to specify dates and times relating to the delivery party specified in the preceding NAD segment.

SG20 - C 99 - MEA-EQN
A group of segments to specify measurements applicable to a goods item.

MEA - M 1 - Measurements
This segment is used to specify a measurement for the goods identified in the GID segment. All measurements given in the MEA segments relate to the highest level of packaging (the despatch units) identified in the GID segment.

EQN - C 1 - Number of units
This segment is used to specify the number of packages (despatch units) within the goods item to which the measurement applies.

SG21 - C 99 - DIM-EQN
A group of segments to specify dimensions applicable to a goods item.

DIM - M 1 - Dimensions
This segment is used to indicate the dimensions of the goods item identified in the GID segment. All dimensions given in the DIM segments relate to the highest level packaging (the despatch units) identified in the GID segment.

© Copyright EAN 1997

EQN - C 1 - Number of units
This segment is used to specify the number of packages (despatch units) within the goods items to which the dimensions apply.

SG22 - C 9 - RFF
A segment group to identify references to a goods item.

RFF - M 1 - Reference
This segment is used to specify references which are applicable to the current goods item only. The references specified here override any specified in segment group 03 in the header.

SG23 - C 9 - PCI-GIN
A group of segments to specify marks and numbers of a goods item.

PCI - M 1 - Package identification
This segment is used to specify markings and labels on the goods item.

GIN - C 9 - Goods identity number
This segment is used to provide identification numbers marked on the packaging of the current goods item.

SG27 - C 999 - SGP
A group of segments to specify the distribution of a goods item among the transport equipment.

SGP - M 1 - Split goods placement
This segment is used to specify the placement of the goods item in the equipment used for the arriving consignment.

SG30 - C 9 - DGS-FTX-SG31-SG32
A group of segments to specify dangerous goods details related to the goods item. One goods item may be in different dangerous goods classes.

DGS - M 1 - Dangerous goods
This segment is used to indicate whether the goods item in the arriving consignment contains any dangerous goods.

FTX - C 99 - Free text
This segment is used to specify any additional information required for the dangerous goods.

SG31 - C 9 - CTA-COM
A group of segments to identify a contact to whom communication regarding the dangerous goods can be directed.

CTA - M 1 - Contact information
This segment is used to identify a contact name relating to the dangerous goods identified in the DGS segment.

© Copyright EAN 1997

COM - C 9 - Communication contact
This segment identifies the communications number and type of communications for the person or department identified in the preceding CTA segment.

SG32 - C 9 - MEA-EQN
A group of segments to identify dangerous goods measurements.

MEA - M 1 - Measurements
This segment is used to indicate measurements of the goods item which are dangerous.

EQN - C 1 - Number of units
This segment is used to indicate the number of units to which the dangerous goods measurements apply.

SG35 - C 999 - EQD-MEA-DIM-SEL-SG37
A group of segments to specify equipment in which goods are transported.

EQD - M 1 - Equipment details
This segment is used to indicate the units of equipment which have been used for the transport of the goods items in the arriving consignment.

MEA - C 9 - Measurements
This segment is used to specify the gross or tare weight of the equipment identified in the previous EQD segment.

DIM - C 9 - Dimensions
This segment is used to indicate the dimensions of the equipment identified in the EQD segment.

SEL - C 99 - Seal number
This segment is used to specify a seal number for the equipment identified in the EQD segment.

SG37 - C 9 - NAD
A segment group to identify different equipment pick-up or drop-off places.

NAD - M 1 - Name and address
This segment is used to specify the equipment owner, pick up or drop off addresses for the equipment specified in the EQD segment.

Arrival Notice Summary Section

UNT - M 1 - MESSAGE TRAILER
This segment is used to end and check the completeness of a message.

* * *

© Copyright EAN 1997

5. Segments Layout

This section describes each segment used in the EANCOM Arrival Notice message. The original EDIFACT segment layout is listed. The appropriate comments relevant to the EANCOM subset are indicated.

Notes:

1. The segments are presented in the sequence in which they appear in the message. The segment or segment group tag is followed by the (M)andatory / (C)onditional indicator, the maximum number of occurrences and the segment description.

2. Reading from left to right, in column one, the data element tags and descriptions are shown, followed by in the second column the EDIFACT status (M or C), the field format, and the picture of the data elements. These first pieces of information constitute the original EDIFACT segment layout.

   Following the EDIFACT information, EANCOM specific information is provided in the third, fourth, and fifth columns. In the third column a status indicator for the use of (C)onditional EDIFACT data elements (see 2.1 through 2.3 below), in the fourth column the restricted indicator (see point 3 on the following page), and in the fifth column notes and code values used for specific data elements in the message.

2.1 (**M**)andatory data elements in EDIFACT segments retain their status in EANCOM.

2.2 Additionally, there are five types of status for data elements with a (C)onditional EDIFACT status, whether for simple, component or composite data elements. These are listed below and can be identified when relevant by the following abbreviations:

-	REQUIRED	**R**	Indicates that the entity is required and must be sent.
-	ADVISED	**A**	Indicates that the entity is advised or recommended.
-	DEPENDENT	**D**	Indicates that the entity must be sent in certain conditions, as defined by the relevant explanatory note.
-	OPTIONAL	**O**	Indicates that the entity is optional and may be sent at the discretion of the user.
-	NOT USED	**N**	Indicates that the entity is not used and should be omitted.

2.3 If a composite is flagged as **N, NOT USED**, all data elements within that composite will have blank status indicators assigned to them.

© Copyright EAN 1997

3. Status indicators detailed in the fourth column which directly relate to the code values detailed in the fifth column may have two values;

- RESTRICTED * A data element marked with an asterix (*) in the fourth column indicates that the listed codes in column five are the only codes available for use with this data element, in this segment, in this message.

- OPEN All data elements where coded representation of data is possible and a restricted set of code values is not indicated are open (no asterix in fourth column). The available codes are listed in the EANCOM Data Elements and Code Sets Directory. Code values may be given as examples or there may be a note on the format or type of code to be used.

* * *

© Copyright EAN 1997

THE ARRIVAL NOTICE

UNH - M 1 - MESSAGE HEADER

Function : To head, identify and specify a message.

Segment number : 1

	EDIFACT	EAN	*	Description
0062 Message reference number	M an..14	M		Senders unique message reference. Sequence number of the messages in the interchange. DE 0062 in the UNT will be identical. Sender generated.
S009 MESSAGE IDENTIFIER	M	M		
0065 Message type identifier	M an..6	M	*	IFTMAN = Arrival notice message
0052 Message type version number	M an..3	M	*	D = Draft directory
0054 Message type release number	M an..3	M	*	96A = Version 96A
0051 Controlling agency	M an..2	M	*	UN = UN/ECE/TRADE/WP.4, United Nations Standard Messages (UNSM)
0057 Association assigned code	C an..6	R	*	EAN001 = EAN Version control number.
0068 Common access reference	C an..35	N		
S010 STATUS OF THE TRANSFER	C	N		
0070 Sequence message transfer number	M n..2			
0073 First/last sequence message transfer indication	C a1			

Segment Notes.

This segment is used to head, identify and specify a message.

DE's 0065, 0052, 0054, and 0051: Indicate that the message is a UNSM Arrival Notice message based on the D. 96A directory under the control of the United Nations.

DE 0057: Indicates that the message is the EANCOM version 001 of the UNSM Arrival Notice message.

Example :

UNH+ME000001+IFTMAN:D:96A:UN:EAN001'

© Copyright EAN 1997

THE ARRIVAL NOTICE

BGM - M	1 -	Beginning of message
Function	:	To indicate the type and function of a message and to transmit the identifying number.
Segment number	:	2

		EDIFACT	EAN	*	Description
C002	**DOCUMENT/MESSAGE NAME**	C	R		
1001	Document/message name, coded	C an..3	R	*	781 = Arrival notice (goods) 78E = Proof of delivery (EAN Code)
1131	Code list qualifier	C an..3	N		
3055	Code list responsible agency, coded	C an..3	D	*	9 = EAN (International Article Numbering association)
1000	Document/message name	C an..35	O		
1004	**Document/message number**	C an..35	R		Arrival notice number assigned by the document sender.
1225	**Message function, coded**	C an..3	R	*	5 = Replace 9 = Original 31 = Copy
4343	**Response type, coded**	C an..3	N		

Segment Notes.

This segment is used to indicate the type and function of a message and to transmit the identifying number.

All references other than the document number DE 1004 are to be put in the RFF segment.

DE 1004: It is recommended that the length of the document number be restricted to a maximum of 17 characters.

DE 1225: The message function, coded is a critical data element in this segment. It applies to all data indicated in the message. The following definitions apply for the restricted codes:

5 = Replace - Cancel the original arrival notice and replace with this arrival notice (original arrival notice reference is specified in RFF SG3).

9 = Original - An original transmission of a arrival notice.

31 = Copy - Copy of the arrival notice for a third party for information purposes.

Example :

BGM+781+52188+9'

Dependency Notes :

DE 3055: This data element is only used if the EAN code value 78E is used in data element 1001.

© Copyright EAN 1997

THE ARRIVAL NOTICE

DTM - C	9 -	Date/time/period
Function	:	To specify date, and/or time, or period.
Segment number	:	3

	EDIFACT	EAN	*	Description
C507 DATE/TIME/PERIOD	M	M		
2005 Date/time/period qualifier	M an..3	M	*	2 = Delivery date/time, requested 17 = Delivery date/time, estimated 58 = Clearance date (Customs) 137 = Document/message date/time 143 = Acceptance date/time of goods 151 = Importation date
2380 Date/time/period	C an..35	R		
2379 Date/time/period format qualifier	C an..3	R		102 = CCYYMMDD 203 = CCYYMMDDHHMM 718 = CCYYMMDD-CCYYMMDD

Segment Notes.

This segment is used to specify any dates related to the arrival notice message.

DE 2005: Identification of the 'Document/message date/time' (code value 137) is mandatory in the arrival notice message.

Example :

DTM+137:19971201:102'

© Copyright EAN 1997

TSR - C 9 -	Transport service requirements				
Function :	To specify the contract and carriage conditions and service and priority requirements for the transport.				
Segment number : 4					
		EDIFACT	EAN	*	Description
C536	**CONTRACT AND CARRIAGE CONDITION**	C	N		
4065	Contract and carriage condition, coded	M an..3			
1131	Code list qualifier	C an..3			
3055	Code list responsible agency, coded	C an..3			
C233	**SERVICE**	C	O		
7273	Service requirement, coded	M an..3	M		13 = Carrier unloads 15 = Consignee unloads
1131	Code list qualifier	C an..3	N		
3055	Code list responsible agency, coded	C an..3	N		
7273	Service requirement, coded	C an..3	O		
1131	Code list qualifier	C an..3	N		
3055	Code list responsible agency, coded	C an..3	N		
C537	**TRANSPORT PRIORITY**	C	N		
4219	Transport priority, coded	M an..3			
1131	Code list qualifier	C an..3			
3055	Code list responsible agency, coded	C an..3			
C703	**NATURE OF CARGO**	C	N		
7085	Nature of cargo, coded	M an..3			
1131	Code list qualifier	C an..3			
3055	Code list responsible agency, coded	C an..3			

Segment Notes.

This segment is used to indicate the party responsible for the unloading of the goods from the transport means at the arrival location.

Example :

TSR + + 13'

MOA - C	99 -	Monetary amount
Function	:	To specify a monetary amount.
Segment number	:	5

	EDIFACT	EAN	*	Description
C516 MONETARY AMOUNT	M	M		
5025 Monetary amount type qualifier	M an..3	M		22 = Cash on delivery amount 50 = Disbursements
5004 Monetary amount	C n..18	R		
6345 Currency, coded	C an..3	O		
6343 Currency qualifier	C an..3	N		
4405 Status, coded	C an..3	N		

Segment Notes.

This segment is used to specify monetary values related to the arriving consignment.

Example :

MOA+22:100'

© Copyright EAN 1997

FTX - C	99 -	Free text

Function : To provide free form or coded text information.
Segment number : 6

	EDIFACT	EAN	*	Description
4451 Text subject qualifier	M an..3	M		AAI = General information BLR = Transport document remarks DAR = Damage remarks NAI = Non-acceptance information (EAN Code)
4453 Text function, coded	C an..3	O		1 = Text for subsequent use
C107 TEXT REFERENCE	C	D		
4441 Free text, coded	M an..3	M		
1131 Code list qualifier	C an..3	O		
3055 Code list responsible agency, coded	C an..3	O		87 = Assigned by carrier 91 = Assigned by supplier or supplier's agent 92 = Assigned by buyer or buyer's agent
C108 TEXT LITERAL	C	D		
4440 Free text	M an..70	M		
4440 Free text	C an..70	O		
4440 Free text	C an..70	O		
4440 Free text	C an..70	O		
4440 Free text	C an..70	O		
3453 Language, coded	C an..3	D		ISO 639 two alpha code

Segment Notes.

This segment is used to provide free form or coded text information related to the entire message.

Use of this segment in free form is not recommended since it may inhibit automatic processing of the arrival notice message. Coded references to standard texts is an available functionality which enables automatic processing and reduces transmission overheads. Standard texts should be mutually defined between trading partners and can be used to cover legal or other requirements.

Example :

FTX+AAI+1+008::87'

e.g. Standard text code 008 = 'Goods arriving require additional handling services.'

Dependency Notes :

DE C107: This composite is only used when trading partners have agreed to use mutually defined code values.

DE C108: This composite is only used if coded text can not be used.

© Copyright EAN 1997

FTX - C	99 -	Free text
Function :		To provide free form or coded text information.
Segment number :	6	
DE 3453: This data element is only used when non coded free text has been provided in data element C108.		

© Copyright EAN 1997

CNT - C	9 -	Control total
Function	:	To provide control total.
Segment number	:	7

	EDIFACT	EAN	*	Description
C270 CONTROL	M	M		
6069 Control qualifier	M an..3	M		7 = Total gross weight 11 = Total number of packages 15 = Total consignment, cube 16 = Total number of equipment
6066 Control value	M n..18	M		
6411 Measure unit qualifier	C an..3	O		

Segment Notes.

This segment is used to provide application data for message control purposes.

Example :

CNT+11:450'

When using code value '11' the total specified in data element 6066 is arrived at by adding the values specified only in the first occurance of C213, data element 7224, of the GID segment.

© Copyright EAN 1997

SG1 - C	99 -	LOC	
LOC - M	1 -	Place/location identification	
Function :		To identify a country/place/location/related location one/related location two.	
Segment number : 8			

	EDIFACT	EAN	*	Description
3227 Place/location qualifier	M an..3	M		7 = Place of delivery 10 = Place of acceptance 57 = Place of payment
C517 LOCATION IDENTIFICATION	C	A		
3225 Place/location identification	C an..25	A		EAN Location Number - Format n13
1131 Code list qualifier	C an..3	O		
3055 Code list responsible agency, coded	C an..3	O		9 = EAN (International Article Numbering association)
3224 Place/location	C an..70	O		
C519 RELATED LOCATION ONE IDENTIFICATION	C	N		
3223 Related place/location one identification	C an..25			
1131 Code list qualifier	C an..3			
3055 Code list responsible agency, coded	C an..3			
3222 Related place/location one	C an..70			
C553 RELATED LOCATION TWO IDENTIFICATION	C	N		
3233 Related place/location two identification	C an..25			
1131 Code list qualifier	C an..3			
3055 Code list responsible agency, coded	C an..3			
3232 Related place/location two	C an..70			
5479 Relation, coded	C an..3	N		

Segment Notes.

This segment is used to identify any locations related to the complete arriving consignment.

Example :

LOC+10+5412345678908::9'

SG3 - C	99 -	RFF-DTM	
RFF - M	1 -	Reference	

Function : To specify a reference.
Segment number : 9

	EDIFACT	EAN	*	Description
C506 REFERENCE	M	M		
1153 Reference qualifier	M an..3	M		AAS = Transport document number CT = Contract number CU = Consignor's reference number ON = Order number (buyer) PDR = Proof of delivery reference number (EAN Code)
1154 Reference number	C an..35	R		
1156 Line number	C an..6	N		
4000 Reference version number	C an..35	N		

Segment Notes.

This segment is used to specify references relating to the consignment arriving.

DE 1153: The code PDR is a code allocated by the recipient of the goods to confirm to the carrier/consignor successful receipt. This code should only be used when the message is being used for proof of delivery purposes.

Example :

RFF+CT:76214'

SG3 - C	99 -	RFF-DTM
DTM - C	9 -	Date/time/period

Function : To specify date, and/or time, or period.
Segment number : 10

	EDIFACT	EAN	*	Description
C507 DATE/TIME/PERIOD	M	M		
2005 Date/time/period qualifier	M an..3	M	*	171 = Reference date/time
2380 Date/time/period	C an..35	R		
2379 Date/time/period format qualifier	C an..3	R		102 = CCYYMMDD 203 = CCYYMMDDHHMM

Segment Notes.

This segment is used to specify any dates related to the previous RFF segment.

Example :

DTM+171:19971125:102'

© Copyright EAN 1997

SG8 - C	99 -	TDT-DTM-SG9	
TDT - M	1 -	Details of transport	
Function :		To specify the transport details such as mode of transport, means of transport, its conveyance reference number and the identification of the means of transport.	
Segment number : 11			

		EDIFACT	EAN	*	Description
8051	**Transport stage qualifier**	M an..3	M	*	20 = Main-carriage transport
8028	**Conveyance reference number**	C an..17	O		Reference number covering the transport.
C220	**MODE OF TRANSPORT**	C	O		
8067	Mode of transport, coded	C an..3	O		10 = Maritime transport 20 = Rail transport 30 = Road transport 40 = Air transport 60 = Multimodal transport
8066	Mode of transport	C an..17	N		
C228	**TRANSPORT MEANS**	C	O		
8179	Type of means of transport identification	C an..8	D		23 = Rail bulk car 25 = Rail express 31 = Truck
8178	Type of means of transport	C an..17	D		
C040	**CARRIER**	C	O		
3127	Carrier identification	C an..17	A		EAN Location Number - Format n13
1131	Code list qualifier	C an..3	O		
3055	Code list responsible agency, coded	C an..3	A		9 = EAN (International Article Numbering association)
3128	Carrier name	C an..35	O		
8101	**Transit direction, coded**	C an..3	N		
C401	**EXCESS TRANSPORTATION INFORMATION**	C	N		
8457	Excess transportation reason, coded	M an..3			
8459	Excess transportation responsibility, coded	M an..3			
7130	Customer authorization number	C an..17			
C222	**TRANSPORT IDENTIFICATION**	C	O		
8213	Id. of means of transport identification	C an..9	O		
1131	Code list qualifier	C an..3	O		
3055	Code list responsible agency, coded	C an..3	O		

© Copyright EAN 1997

SG8	- C	99 -	TDT-DTM-SG9
TDT	- M	1 -	Details of transport

Function : To specify the transport details such as mode of transport, means of transport, its conveyance reference number and the identification of the means of transport.

Segment number : 11

		EDIFACT	EAN	*	Description
8212	Id. of the means of transport	C an..35	R		Vehicle license plate/Aircraft number.
8453	Nationality of means of transport, coded	C an..3	O		ISO 3166 two alpha code
8281	**Transport ownership, coded**	C an..3	N		

Segment Notes.

This segment is used to indicate the main carriage transport means, and where necessary, the exact identification of the transport used for the arriving consignment.

Example :

TDT+20++30+31'

Dependency Notes :

Date Elements 8179 and 8178 are only used when the type of transport must be specifically identified, that is, a generic description such as road transport is unsuitable.

SG8 - C 99 - TDT-DTM-SG9				
DTM - C 9 - Date/time/period				
Function : To specify date, and/or time, or period. Segment number : 12				
	EDIFACT	EAN	*	Description
C507 DATE/TIME/PERIOD	M	M		
2005 Date/time/period qualifier	M an..3	M	*	132 = Arrival date/time, estimated 186 = Departure date/time, actual
2380 Date/time/period	C an..35	R		
2379 Date/time/period format qualifier	C an..3	R		102 = CCYYMMDD 203 = CCYYMMDDHHMM 718 = CCYYMMDD-CCYYMMDD

Segment Notes.

This segment is used to specify any dates relating to the transport specified in the previous TDT segment.

Example :

DTM+132:199712151000:203'

SG8	- C	99 -	TDT-DTM-SG9
SG9	- C	99 -	LOC
LOC	- M	1 -	Place/location identification

Function : To identify a country/place/location/related location one/related location two.
Segment number : 13

		EDIFACT	EAN	*	Description
3227	**Place/location qualifier**	M an..3	M		5 = Place of departure 8 = Place of destination 9 = Place/port of loading 11 = Place/port of discharge
C517	**LOCATION IDENTIFICATION**	C	A		
3225	Place/location identification	C an..25	A		EAN Location Number - Format n13
1131	Code list qualifier	C an..3	O		
3055	Code list responsible agency, coded	C an..3	O		9 = EAN (International Article Numbering association)
3224	Place/location	C an..70	O		
C519	**RELATED LOCATION ONE IDENTIFICATION**	C	N		
3223	Related place/location one identification	C an..25			
1131	Code list qualifier	C an..3			
3055	Code list responsible agency, coded	C an..3			
3222	Related place/location one	C an..70			
C553	**RELATED LOCATION TWO IDENTIFICATION**	C	N		
3233	Related place/location two identification	C an..25			
1131	Code list qualifier	C an..3			
3055	Code list responsible agency, coded	C an..3			
3232	Related place/location two	C an..70			
5479	**Relation, coded**	C an..3	N		

Segment Notes.

This segment is used to identify any locations related to the transport details previously specified.

Example :

LOC + 5 + 5412345678908::9'

SG11 - C	99 -	NAD-SG12-SG15
NAD - M	1 -	Name and address
Function :		To specify the name/address and their related function, either by CO82 only and/or structured by CO80 thru 3207.
Segment number : 14		

		EDIFACT	EAN	*	Description
3035	**Party qualifier**	M an..3	M		CA = Carrier CN = Consignee CZ = Consignor DP = Delivery party FP = Freight/charges payer FW = Freight forwarder NI = Notify party
C082	**PARTY IDENTIFICATION DETAILS**	C	A		
3039	Party id. identification	M an..35	M		EAN Location Number - Format n13
1131	Code list qualifier	C an..3	N		
3055	Code list responsible agency, coded	C an..3	R	*	9 = EAN (International Article Numbering association)
C058	**NAME AND ADDRESS**	C	N		
3124	Name and address line	M an..35			
3124	Name and address line	C an..35			
3124	Name and address line	C an..35			
3124	Name and address line	C an..35			
3124	Name and address line	C an..35			
C080	**PARTY NAME**	C	D		
3036	Party name	M an..35	M		Party Name in clear text.
3036	Party name	C an..35	O		
3036	Party name	C an..35	O		
3036	Party name	C an..35	O		
3036	Party name	C an..35	O		
3045	Party name format, coded	C an..3	O		
C059	**STREET**	C	D		
3042	Street and number/p.o. box	M an..35	M		Building Name/Number and Street
3042	Street and number/p.o. box	C an..35	O		Name and/or P.O. Box
3042	Street and number/p.o. box	C an..35	O		
3042	Street and number/p.o. box	C an..35	O		
3164	**City name**	C an..35	D		City/Town, clear text.

© Copyright EAN 1997

SG11 - C	99 -	NAD-SG12-SG15
NAD - M	1 -	Name and address

Function : To specify the name/address and their related function, either by CO82 only and/or structured by CO80 thru 3207.

Segment number : 14

		EDIFACT	EAN	*	Description
3229	**Country sub-entity identification**	C an..9	D		County/State in clear text.
3251	**Postcode identification**	C an..9	D		Postal Code
3207	**Country, coded**	C an..3	D		ISO 3166 two alpha code

Segment Notes.

This segment is used to identify the parties involved in the arrival notice message. Identification of the consignor and/or consignee, and/or the carrier or forwarder is mandatory in the arrival notice message.

If coded address information can not be used it is recommended to use a structured address (C080 through 3207).

DE 3039: For identification of parties it is recommended to use EAN location numbers.

Example :

NAD + CZ + 5411234512309::9'

NAD + FW + 5412345123453::9'

Dependency Notes :

The following composites and data elements are only used when a coded name and address can not be used. The affected composites and data elements are as follows:

C080 - C059 - 3164 - 3229 - 3251 - 3207

SG11 - C	99 -	NAD-SG12-SG15
SG12 - C	9 -	CTA-COM
CTA - M	1 -	Contact information

Function : To identify a person or a department to whom communication should be directed.
Segment number : 15

	EDIFACT	EAN	*	Description
3139 Contact function, coded	C an..3	R		IC = Information contact
C056 DEPARTMENT OR EMPLOYEE DETAILS	C	O		
3413 Department or employee identification	C an..17	O		
3412 Department or employee	C an..35	O		

Segment Notes.

This segment is used to identify department and contact names within the company specified in the NAD segment.

Example :

CTA+IC+:R PAX'

SG11 - C	99 -	NAD-SG12-SG15
SG12 - C	9 -	CTA-COM
COM - C	9 -	Communication contact

Function : To identify a communication number of a department or a person to whom communication should be directed.

Segment number : 16

	EDIFACT	EAN	*	Description
C076 COMMUNICATION CONTACT	M	M		
3148 Communication number	M an..512	M		
3155 Communication channel qualifier	M an..3	M		EM = Electronic mail FX = Fax TE = Telephone TL = Telex XF = X.400

Segment Notes.

This segment identifies the communications number and type of communications for the person or department identified in the preceding CTA segment.

Example :

COM+0033148759632:FX'

SG11 - C	99 -	NAD-SG12-SG15
SG15 - C	9 -	RFF
RFF - M	1 -	Reference

Function : To specify a reference.
Segment number : 17

	EDIFACT	EAN	*	Description
C506 REFERENCE	M	M		
1153 Reference qualifier	M an..3	M	*	API = Additional party identification (EAN Code) GN = Government reference number VA = VAT registration number XA = Company/place registration number
1154 Reference number	C an..35	R		
1156 Line number	C an..6	N		
4000 Reference version number	C an..35	N		

Segment Notes.

This segment is used to identify any references related to the party identified in the NAD segment.

Example :

RFF+API:6532'

SG18 - C	999 -	GID-TMP-RNG-FTX-SG19-SG20-SG21-SG22-SG23-SG27-SG30			
GID - M	1 -	Goods item details			
Function :		To indicate totals of a goods item.			
Segment number : 18					
		EDIFACT	EAN	*	Description
1496	**Goods item number**	C n..5	R		Application generated number of the item lines within the arrival notice.
C213	**NUMBER AND TYPE OF PACKAGES**	C	R		
7224	Number of packages	C n..8	M		
7065	Type of packages identification	C an..17	O		CT = Carton PK = Package 09 = Returnable pallet (EAN Code) 201 = Pallet ISO 1 - 1/1 EURO Pallet (EAN Code)
1131	Code list qualifier	C an..3	N		
3055	Code list responsible agency, coded	C an..3	D	*	9 = EAN (International Article Numbering association)
7064	Type of packages	C an..35	N		
C213	**NUMBER AND TYPE OF PACKAGES**	C	O		
7224	Number of packages	C n..8	M		
7065	Type of packages identification	C an..17	O		CT = Carton PK = Package 09 = Returnable pallet (EAN Code) 201 = Pallet ISO 1 - 1/1 EURO Pallet (EAN Code)
1131	Code list qualifier	C an..3	N		
3055	Code list responsible agency, coded	C an..3	D	*	9 = EAN (International Article Numbering association)
7064	Type of packages	C an..35	N		
C213	**NUMBER AND TYPE OF PACKAGES**	C	O		
7224	Number of packages	C n..8	M		
7065	Type of packages identification	C an..17	O		CT = Carton PK = Package 09 = Returnable pallet (EAN Code) 201 = Pallet ISO 1 - 1/1 EURO Pallet (EAN Code)
1131	Code list qualifier	C an..3	N		
3055	Code list responsible agency, coded	C an..3	D	*	9 = EAN (International Article Numbering

© Copyright EAN 1997

SG18 - C	999 -	GID-TMP-RNG-FTX-SG19-SG20-SG21-SG22-SG23-SG27-SG30
GID - M	1 -	Goods item details

Function : To indicate totals of a goods item.
Segment number : 18

	EDIFACT	EAN	*	Description
7064 Type of packages	C an..35	N		association)

Segment Notes.

This segment is the trigger segment for the detail section of the arrival notice message. It is used to specify the type
of packaging for the goods item(s) which are contained in the arriving consignment.

Within the GID segment it is possible to identify up to 3 levels of packaging hierarchy for the transport goods item. The top level (first occurence of C213) identifies the despatch unit.

Example :

GID + 1 + 1:09::9 + 6:CT'

(The top level is 1 returnable pallet with a second level containing 6 cartons.)

Dependency notes:

DE 3055: This data element is only used with the code value '9' if the Type of Packages identified in data element 7065 is an EAN Code.

SG18 - C	999 -	GID-TMP-RNG-FTX-SG19-SG20-SG21-SG22-SG23-SG27-SG30
TMP - C	1 -	Temperature

Function : To specify the temperature setting.
Segment number : 19

	EDIFACT	EAN	*	Description
6245 Temperature qualifier	M an..3	M	*	2 = Transport temperature
C239 TEMPERATURE SETTING	C	R		
6246 Temperature setting	C n3	O		
6411 Measure unit qualifier	C an..3	O		CEL = Degree celsius FAH = Degree fahrenheit KEL = Kelvin

Segment Notes.

This segment is used to specify transport temperature settings related to the current goods item.

Example :

TMP+2+040:CEL'

SG18 - C	999 -	GID-TMP-RNG-FTX-SG19-SG20-SG21-SG22-SG23-SG27-SG30
RNG - C	1 -	Range details

Function : To identify a range.
Segment number : 20

	EDIFACT	EAN	*	Description
6167 Range type qualifier	M an..3	M	*	5 = Temperature range
C280 RANGE	C	R		
6411 Measure unit qualifier	M an..3	M		CEL = Degree celsius FAH = Degree fahrenheit KEL = Kelvin
6162 Range minimum	C n..18	O		
6152 Range maximum	C n..18	O		

Segment Notes.

This segment is used to specify transport temperature ranges related to the goods item.

Example :

RNG+5+CEL:4:10'

© Copyright EAN 1997

SG18 - C	999 -	GID-TMP-RNG-FTX-SG19-SG20-SG21-SG22-SG23-SG27-SG30
FTX - C	9 -	Free text

Function : To provide free form or coded text information.
Segment number : 21

	EDIFACT	EAN	*	Description
4451 Text subject qualifier	M an..3	M		AAA = Goods description DAR = Damage remarks MIS = Missing goods remarks (EAN Code) NAI = Non-acceptance information (EAN Code)
4453 Text function, coded	C an..3	O		1 = Text for subsequent use
C107 TEXT REFERENCE	C	D		
4441 Free text, coded	M an..3	M		
1131 Code list qualifier	C an..3	O		
3055 Code list responsible agency, coded	C an..3	O		87 = Assigned by carrier 91 = Assigned by supplier or supplier's agent 92 = Assigned by buyer or buyer's agent
C108 TEXT LITERAL	C	D		
4440 Free text	M an..70	M		
4440 Free text	C an..70	O		
4440 Free text	C an..70	O		
4440 Free text	C an..70	O		
4440 Free text	C an..70	O		
3453 Language, coded	C an..3	D		ISO 639 two alpha code

Segment Notes.

This segment is used to provide free form or coded text information related to the entire message.

Use of this segment in free form is not recommended since it may inhibit automatic processing of the arrival notice message. Coded references to standard texts is an available functionality which enables automatic processing and reduces transmission overheads. Standard texts should be mutually defined between trading partners and can be used to cover legal or other requirements.

Example :

FTX+DAR+1+012'

(Code value 012 = Goods item damaged by carrier during un-loading at destination.)

Dependency Notes :

DE C107: This composite is only used when trading partners have agreed to use mutually defined code values.

DE C108: This composite is only used if coded text can not be used.

DE 3453: This data element is only used when non coded free text has been provided in data element C108.

© Copyright EAN 1997

SG18 - C	999 -	GID-TMP-RNG-FTX-SG19-SG20-SG21-SG22-SG23-SG27-SG30
SG19 - C	9 -	NAD-DTM
NAD - M	1 -	Name and address

Function : To specify the name/address and their related function, either by CO82 only and/or structured by CO80 thru 3207.

Segment number : 22

		EDIFACT	EAN	*	Description
3035	**Party qualifier**	M an..3	M	*	DP = Delivery party
C082	**PARTY IDENTIFICATION DETAILS**	C	A		
3039	Party id. identification	M an..35	M		EAN Location Number - Format n13
1131	Code list qualifier	C an..3	N		
3055	Code list responsible agency, coded	C an..3	R	*	9 = EAN (International Article Numbering association)
C058	**NAME AND ADDRESS**	C	N		
3124	Name and address line	M an..35			
3124	Name and address line	C an..35			
3124	Name and address line	C an..35			
3124	Name and address line	C an..35			
3124	Name and address line	C an..35			
C080	**PARTY NAME**	C	D		
3036	Party name	M an..35	M		Party Name in clear text.
3036	Party name	C an..35	O		
3036	Party name	C an..35	O		
3036	Party name	C an..35	O		
3036	Party name	C an..35	O		
3045	Party name format, coded	C an..3	O		
C059	**STREET**	C	D		
3042	Street and number/p.o. box	M an..35	M		Building Name/Number and Street
3042	Street and number/p.o. box	C an..35	O		Name and/or P.O. Box
3042	Street and number/p.o. box	C an..35	O		
3042	Street and number/p.o. box	C an..35	O		
3164	**City name**	C an..35	D		City/Town, clear text.
3229	**Country sub-entity identification**	C an..9	D		County/State in clear text.
3251	**Postcode identification**	C an..9	D		Postal Code
3207	**Country, coded**	C an..3	D		ISO 3166 two alpha code

Segment Notes.

This segment is used to specify the place of delivery for the current goods item.

© Copyright EAN 1997

SG19 - C	9 -	NAD-DTM
NAD - M	1 -	Name and address

Function : To specify the name/address and their related function, either by CO82 only and/or structured by CO80 thru 3207.

Segment number : 22

Only one occurrence of this segment is allowed per arriving goods item.

If coded address information can not be used it is recommended to use a structured address (C080 through 3207).

DE 3039: For identification of parties it is recommended to use EAN location numbers.

Example :

NAD + DP + 5412345123453::9'

Dependency Notes :

The following composites and data elements are only used when a coded name and address can not be used. The affected composites and data elements are as follows:

C080 - C059 - 3164 - 3229 - 3251 - 3207

© Copyright EAN 1997

SG18 - C	999 -	GID-TMP-RNG-FTX-SG19-SG20-SG21-SG22-SG23-SG27-SG30
SG19 - C	9 -	NAD-DTM
DTM - C	1 -	Date/time/period

Function : To specify date, and/or time, or period.
Segment number : 23

	EDIFACT	EAN	*	Description
C507 DATE/TIME/PERIOD	M	M		
2005 Date/time/period qualifier	M an..3	M	*	2 = Delivery date/time, requested 17 = Delivery date/time, estimated 58 = Clearance date (Customs) 151 = Importation date
2380 Date/time/period	C an..35	R		
2379 Date/time/period format qualifier	C an..3	R		102 = CCYYMMDD 203 = CCYYMMDDHHMM

Segment Notes.

This DTM segment is used to specify dates and times relating to the delivery party specified in the preceding NAD segment.

Example :

DTM+17:19971220:102'

SG18 - C	999 -	GID-TMP-RNG-FTX-SG19-SG20-SG21-SG22-SG23-SG27-SG30
SG20 - C	99 -	MEA-EQN
MEA - M	1 -	Measurements

Function : To specify physical measurements, including dimension tolerances, weights and counts.

Segment number : 24

	EDIFACT	EAN	*	Description
6311 Measurement application qualifier	M an..3	M		AAE = Measurement AAI = Item weight LMT = Loading meters
C502 MEASUREMENT DETAILS	C	A		
6313 Measurement dimension, coded	C an..3	A		AAB = Unit gross weight AAW = Gross volume G = Gross weight GMC = Gross measurement cube (EAN Code) PMC = Package net measurement cube (EAN Code) T = Tare weight
6321 Measurement significance, coded	C an..3	O		3 = Approximately 4 = Equal to
6155 Measurement attribute, coded	C an..3	N		
6154 Measurement attribute	C an..70	N		
C174 VALUE/RANGE	C	R		
6411 Measure unit qualifier	M an..3	M		KGM = Kilogram LTR = Litre (1 dm3) MTR = Metre MTQ = Cubic metre TNE = Metric ton (1000kg)
6314 Measurement value	C n..18	O		
6162 Range minimum	C n..18	O		
6152 Range maximum	C n..18	O		
6432 Significant digits	C n..2	N		
7383 Surface/layer indicator, coded	C an..3	N		

Segment Notes.

This segment is used to specify a measurement for the goods identified in the GID segment. All measurements given in the MEA segments relate to the highest level of packaging (the despatch units) identified in the GID segment.

DE 6313: This qualifier determines the measurement value to be applied either to one single despatch unit of the goods item or to a number of despatch units of the goods item.

When Unit Gross Weight is provided in this segment the measurement provided relates to the total gross weight of one single despatch unit in the goods item. The number of despatch units of the goods item that all have the same

SG20 - C	99 -	MEA-EQN
MEA - M	1 -	Measurements

Function : To specify physical measurements, including dimension tolerances, weights and counts.

Segment number : 24

quoted gross weight is specified in the EQN segment when different from the number of despatch units specified in the GID segment.

When Gross Weight is provided the measurement relates to the total gross weight of a number of despatch units in the goods item. The number of despatch units of the goods item that together have the quoted gross weight is specified in the EQN segment when different to the number of despatch units specified in the GID segment.

Example :

MEA + AAI + G + KGM:1600'

SG18 - C	999 -	GID-TMP-RNG-FTX-SG19-SG20-SG21-SG22-SG23-SG27-SG30
SG20 - C	99 -	MEA-EQN
EQN - C	1 -	Number of units

Function : To specify the number of units.
Segment number : 25

	EDIFACT	EAN	*	Description
C523 NUMBER OF UNIT DETAILS	M	M		
6350 Number of units	C n..15	R		
6353 Number of units qualifier	C an..3	N		

Segment Notes.

This segment is used to specify the number of packages (despatch units) within the goods item to which the measurement applies.

Example :

EQN + 1'

SG18 - C	999 -	GID-TMP-RNG-FTX-SG19-SG20-SG21-SG22-SG23-SG27-SG30
SG21 - C	99 -	DIM-EQN
DIM - M	1 -	Dimensions

Function : To specify dimensions.
Segment number : 26

	EDIFACT	EAN	*	Description
6145 Dimension qualifier	M an..3	M	*	1 = Gross dimensions 10E = Unit gross dimensions (EAN Code)
C211 DIMENSIONS	M	M		
6411 Measure unit qualifier	M an..3	M		MTR = Metre
6168 Length dimension	C n..15	O		
6140 Width dimension	C n..15	O		
6008 Height dimension	C n..15	O		

Segment Notes.

This segment is used to indicate the dimensions of the goods item identified in the GID segment. All dimensions given in the DIM segments relate to the highest level packaging (the despatch units) identified in the GID segment.

DE 6145: This qualifier determines the dimension values to be applied either to one single despatch unit of the goods item or to a number of despatch units of the goods item.

When Unit Gross Dimensions are provided in this segment the dimension values provided relate to the total gross dimensions of one single despatch unit in the goods item. The number of despatch units of the goods item that all have the same quoted gross dimensions is specified in the EQN segment when different from the number of despatch units specified in the GID segment.

When Gross Dimensions are provided the dimension values relate to the total gross weight of a number of despatch units in the goods item. The number of despatch units of the goods item that together have the quoted gross dimension is specified in the EQN segment when different to the number of despatch units specified in the GID segment.

Example :

DIM+1+MTR:4:2:2'

SG18 - C	999 -	GID-TMP-RNG-FTX-SG19-SG20-SG21-SG22-SG23-SG27-SG30
SG21 - C	99 -	DIM-EQN
EQN - C	1 -	Number of units

Function : To specify the number of units.
Segment number : 27

	EDIFACT	EAN	*	Description
C523 NUMBER OF UNIT DETAILS	M	M		
6350 Number of units	C n..15	R		
6353 Number of units qualifier	C an..3	N		

Segment Notes.

This segment is used to specify the number of packages (despatch units) within the goods items to which the dimensions apply.

DE 6350: The value expressed in this data element must be the sum of all the values of DE 7224 in the first occurance of C213 in the GID segment throughout the message.

Example :

EQN + 22'

SG18 - C	999 -	GID-TMP-RNG-FTX-SG19-SG20-SG21-SG22-SG23-SG27-SG30
SG22 - C	9 -	RFF
RFF - M	1 -	Reference

Function : To specify a reference.
Segment number : 28

	EDIFACT	EAN	*	Description
C506 REFERENCE	M	M		
1153 Reference qualifier	M an..3	M		CT = Contract number ON = Order number (buyer)
1154 Reference number	C an..35	R		
1156 Line number	C an..6	O		
4000 Reference version number	C an..35	N		

Segment Notes.

This segment is used to specify references which are applicable to the current goods item only. The references specified here override any specified in segment group 03 in the header.

Example :

RFF+CT:52441'

SG18 - C	999 -	GID-TMP-RNG-FTX-SG19-SG20-SG21-SG22-SG23-SG27-SG30
SG23 - C	9 -	PCI-GIN
PCI - M	1 -	Package identification

Function : To specify markings and labels on individual packages or physical units.
Segment number : 29

	EDIFACT	EAN	*	Description
4233 Marking instructions, coded	C an..3	R		16 = Buyer's instructions 17 = Supplier's instructions 18 = Carrier's instructions 33E = Marked with serial shipping container code (EAN Code)
C210 MARKS & LABELS	C	O		
7102 Shipping marks	M an..35	M		
7102 Shipping marks	C an..35	O		
7102 Shipping marks	C an..35	O		
7102 Shipping marks	C an..35	O		
7102 Shipping marks	C an..35	O		
7102 Shipping marks	C an..35	O		
7102 Shipping marks	C an..35	O		
7102 Shipping marks	C an..35	O		
7102 Shipping marks	C an..35	O		
7102 Shipping marks	C an..35	O		
8275 Container/package status, coded	C an..3	N		
C827 TYPE OF MARKING	C	N		
7511 Type of marking, coded	M an..3			
1131 Code list qualifier	C an..3			
3055 Code list responsible agency, coded	C an..3			

Segment Notes.

This segment is used to specify markings and labels on the goods item.

Example :

PCI+33E'

The packaging for the goods item are marked with the EAN Serial Shipping Container Code 354123450000000014.

© Copyright EAN 1997

SG18 - C	999 -	GID-TMP-RNG-FTX-SG19-SG20-SG21-SG22-SG23-SG27-SG30
SG23 - C	9 -	PCI-GIN
GIN - C	9 -	Goods identity number

Function : To give specific identification numbers, either as single numbers or ranges.
Segment number : 30

	EDIFACT	EAN	*	Description
7405 Identity number qualifier	M an..3	M	*	BJ = Serial shipping container code
C208 IDENTITY NUMBER RANGE	M	M		
7402 Identity number	M an..35	M		
7402 Identity number	C an..35	N		
C208 IDENTITY NUMBER RANGE	C	O		
7402 Identity number	M an..35	M		
7402 Identity number	C an..35	N		
C208 IDENTITY NUMBER RANGE	C	O		
7402 Identity number	M an..35	M		
7402 Identity number	C an..35	N		
C208 IDENTITY NUMBER RANGE	C	O		
7402 Identity number	M an..35	M		
7402 Identity number	C an..35	N		
C208 IDENTITY NUMBER RANGE	C	O		
7402 Identity number	M an..35	M		
7402 Identity number	C an..35	N		

Segment Notes.

This segment is used to provide identification numbers marked on the packaging of the current goods item.

In EANCOM it is required to use the Serial Shipping Container Code (SSCC's) for unique identification of individual transport packages.

Example :

GIN + BJ + 354123450000000014'

SG18 - C	999 -	GID-TMP-RNG-FTX-SG19-SG20-SG21-SG22-SG23-SG27-SG30
SG27 - C	999 -	SGP
SGP - M	1 -	Split goods placement

Function : To specify the placement of goods in relation to equipment.
Segment number : 31

		EDIFACT	EAN	*	Description
C237	**EQUIPMENT IDENTIFICATION**	M	M		
8260	Equipment identification number	C an..17	R		
1131	Code list qualifier	C an..3	N		
3055	Code list responsible agency, coded	C an..3	N		
3207	Country, coded	C an..3	O		
7224	**Number of packages**	C n..8	O		

Segment Notes.

This segment is used to specify the placement of the goods item in the equipment used for the arriving consignment.

DE 8260: The value in DE 8260 indicates the identity number of the equipment in/on which the goods item is transported.

Example :

SGP + 45223 + 1'

SG18 - C	999 -	GID-TMP-RNG-FTX-SG19-SG20-SG21-SG22-SG23-SG27-SG30
SG30 - C	9 -	DGS-FTX-SG31-SG32
DGS - M	1 -	Dangerous goods

Function : To identify dangerous goods.
Segment number : 32

		EDIFACT	EAN	*	Description
8273	**Dangerous goods regulations, coded**	C an..3	R		ADR = European agreement regarding the total carriage of dangerous goods CFR = 49 code of federal regulations
C205	**HAZARD CODE**	C	O		
8351	Hazard code identification	M an..7	M		
8078	Hazard substance/item/page number	C an..7	O		
8092	Hazard code version number	C an..10	O		
C234	**UNDG INFORMATION**	C	O		
7124	UNDG number	C n4	O		
7088	Dangerous goods flashpoint	C an..8	O		
C223	**DANGEROUS GOODS SHIPMENT FLASHPOINT**	C	O		
7106	Shipment flashpoint	C n3	O		
6411	Measure unit qualifier	C an..3	O		
8339	**Packing group, coded**	C an..3	O		1 = Great danger 2 = Medium danger 3 = Minor danger
8364	**EMS number**	C an..6	O		
8410	**MFAG**	C an..4	O		
8126	**Trem card number**	C an..10	O		
C235	**HAZARD IDENTIFICATION**	C	N		
8158	Hazard identification number, upper part	C an..4			
8186	Substance identification number, lower part	C an4			
C236	**DANGEROUS GOODS LABEL**	C	N		
8246	Dangerous goods label marking	C an..4			
8246	Dangerous goods label marking	C an..4			
8246	Dangerous goods label marking	C an..4			

Segment Notes.

This segment is used to indicate whether the goods item in the arriving consignment contains any dangerous goods.

SG30 - C	9 -	DGS-FTX-SG31-SG32
DGS - M	1 -	Dangerous goods
Function :		To identify dangerous goods.
Segment number : 32		

Example :

DGS + ADR + 3B + 1178 + 21.0:CEL'

Dangerous goods according to the ADR regulation 3B for extremely flammable liquids with a flashpoint of 21 degrees celsius and a UN number 1178.

SG18 - C	999 -	GID-TMP-RNG-FTX-SG19-SG20-SG21-SG22-SG23-SG27-SG30
SG30 - C	9 -	DGS-FTX-SG31-SG32
FTX - C	99 -	Free text

Function : To provide free form or coded text information.
Segment number : 33

	EDIFACT	EAN	*	Description
4451 Text subject qualifier	M an..3	M	*	AAC = Dangerous goods additional information AAD = Dangerous goods, technical name
4453 Text function, coded	C an..3	O		1 = Text for subsequent use
C107 TEXT REFERENCE	C	D		
4441 Free text, coded	M an..3	M		
1131 Code list qualifier	C an..3	O		
3055 Code list responsible agency, coded	C an..3	O		89 = Assigned by distributor 90 = Assigned by manufacturer 91 = Assigned by supplier or supplier's agent 92 = Assigned by buyer or buyer's agent
C108 TEXT LITERAL	C	D		
4440 Free text	M an..70	M		
4440 Free text	C an..70	O		
4440 Free text	C an..70	O		
4440 Free text	C an..70	O		
4440 Free text	C an..70	O		
3453 Language, coded	C an..3	D		ISO 639 two alpha code

Segment Notes.

This segment is used to specify any additional information required for the dangerous goods.

Use of this segment in free form is not recommended since it may inhibit automatic processing of the arrival notice message. Coded references to standard texts is an available functionality which enables automatic processing and reduces transmission overheads. Standard texts should be mutually defined between trading partners and can be used to cover legal or other requirements.

Example :

FTX+AAD++DIETHYL ACETALDEHYDE'

Dependency Notes :

DE C107: This composite is only used when trading partners have agreed to use mutually defined code values.

DE C108: This composite is only used if coded text can not be used.

DE 3453: This data element is only used when non coded free text has been provided in data element C108.

SG18 - C	999 -	GID-TMP-RNG-FTX-SG19-SG20-SG21-SG22-SG23-SG27-SG30
SG30 - C	9 -	DGS-FTX-SG31-SG32
SG31 - C	9 -	CTA-COM
CTA - M	1 -	Contact information

Function : To identify a person or a department to whom communication should be directed.
Segment number : 34

	EDIFACT	EAN	*	Description
3139 Contact function, coded	C an..3	R		HE = Emergency dangerous goods contact HG = Dangerous goods contact
C056 DEPARTMENT OR EMPLOYEE DETAILS	C	O		
3413 Department or employee identification	C an..17	O		
3412 Department or employee	C an..35	O		

Segment Notes.

This segment is used to identify a contact name relating to the dangerous goods identified in the DGS segment.

Example :

CTA+HG+:J REEVES'

SG18 - C	999 -	GID-TMP-RNG-FTX-SG19-SG20-SG21-SG22-SG23-SG27-SG30
SG30 - C	9 -	DGS-FTX-SG31-SG32
SG31 - C	9 -	CTA-COM
COM - C	9 -	Communication contact

Function : To identify a communication number of a department or a person to whom communication should be directed.

Segment number : 35

	EDIFACT	EAN	*	Description
C076 COMMUNICATION CONTACT	M	M		
3148 Communication number	M an..512	M		
3155 Communication channel qualifier	M an..3	M		EM = Electronic mail FX = Fax TE = Telephone TL = Telex XF = X.400

Segment Notes.

This segment identifies the communications number and type of communications for the person or department identified in the preceding CTA segment.

Example :

COM+0033148759632:TE'

SG18 - C	999 -	GID-TMP-RNG-FTX-SG19-SG20-SG21-SG22-SG23-SG27-SG30
SG30 - C	9 -	DGS-FTX-SG31-SG32
SG32 - C	9 -	MEA-EQN
MEA - M	1 -	Measurements

Function : To specify physical measurements, including dimension tolerances, weights and counts.

Segment number : 36

		EDIFACT	EAN	*	Description
6311	**Measurement application qualifier**	M an..3	M		AAE = Measurement
C502	**MEASUREMENT DETAILS**	C	A		
6313	Measurement dimension, coded	C an..3	A		AAF = Net net weight
6321	Measurement significance, coded	C an..3	N		
6155	Measurement attribute, coded	C an..3	N		
6154	Measurement attribute	C an..70	N		
C174	**VALUE/RANGE**	C	R		
6411	Measure unit qualifier	M an..3	M		KGM = Kilogram
6314	Measurement value	C n..18	O		
6162	Range minimum	C n..18	O		
6152	Range maximum	C n..18	O		
6432	Significant digits	C n..2	N		
7383	**Surface/layer indicator, coded**	C an..3	N		

Segment Notes.

This segment is used to indicate measurements of the goods item which are dangerous.

Example :

MEA+AAE+AAF+KGM:500'

SG18 - C	999 -	GID-TMP-RNG-FTX-SG19-SG20-SG21-SG22-SG23-SG27-SG30
SG30 - C	9 -	DGS-FTX-SG31-SG32
SG32 - C	9 -	MEA-EQN
EQN - C	1 -	Number of units

Function : To specify the number of units.
Segment number : 37

	EDIFACT	EAN	*	Description
C523 NUMBER OF UNIT DETAILS	M	M		
6350 Number of units	C n..15	R		
6353 Number of units qualifier	C an..3	O		2 = Transportable unit

Segment Notes.

This segment is used to indicate the number of units to which the dangerous goods measurements apply.

Example :

EQN + 1 + 2'

SG35 - C	999 -	EQD-MEA-DIM-SEL-SG37			
EQD - M	1 -	Equipment details			
Function :		To identify a unit of equipment.			
Segment number : 38					
		EDIFACT	EAN	*	Description
8053	**Equipment qualifier**	M an..3	M		CN = Container PA = Pallet UL = ULD (Unit load device) BPN = Box pallet non exchangeable EFP = Exchangeable EUR flat pallet
C237	**EQUIPMENT IDENTIFICATION**	C	R		
8260	Equipment identification number	C an..17	O		
1131	Code list qualifier	C an..3	O		
3055	Code list responsible agency, coded	C an..3	O		9 = EAN (International Article Numbering association)
3207	Country, coded	C an..3	O		
C224	**EQUIPMENT SIZE AND TYPE**	C	O		
8155	Equipment size and type identification	C an..10	O		6 = Pressurized tank 21 = Container IC 20 ft.
1131	Code list qualifier	C an..3	O		
3055	Code list responsible agency, coded	C an..3	O		
8154	Equipment size and type	C an..35	O		
8077	**Equipment supplier, coded**	C an..3	O		1 = Shipper supplied 2 = Carrier supplied
8249	**Equipment status, coded**	C an..3	O		
8169	**Full/empty indicator, coded**	C an..3	O		4 = Empty 5 = Full

Segment Notes.

This segment is used to indicate the units of equipment which have been used for the transport of the goods items in
the arriving consignment.

Example :

EQD+UL+45223'

SG35 - C	999 -	EQD-MEA-DIM-SEL-SG37
MEA - C	9 -	Measurements

Function : To specify physical measurements, including dimension tolerances, weights and counts.

Segment number : 39

		EDIFACT	EAN	*	Description
6311	**Measurement application qualifier**	M an..3	M	*	AAE = Measurement
C502	**MEASUREMENT DETAILS**	C	A		
6313	Measurement dimension, coded	C an..3	A		AAD = Total gross weight T = Tare weight
6321	Measurement significance, coded	C an..3	N		
6155	Measurement attribute, coded	C an..3	O		
6154	Measurement attribute	C an..70	N		
C174	**VALUE/RANGE**	C	R		
6411	Measure unit qualifier	M an..3	M		KGM = Kilogram TNE = Metric ton (1000kg)
6314	Measurement value	C n..18	O		
6162	Range minimum	C n..18	O		
6152	Range maximum	C n..18	O		
6432	Significant digits	C n..2	N		
7383	**Surface/layer indicator, coded**	C an..3	N		

Segment Notes.

This segment is used to specify the gross or tare weight of the equipment identified in the previous EQD segment.

Example :

MEA + AAE + AAD + KGM:622'

© Copyright EAN 1997

SG35 - C	999 -	EQD-MEA-DIM-SEL-SG37			
DIM - C	9 -	Dimensions			
Function :		To specify dimensions.			
Segment number : 40					
		EDIFACT	EAN	*	Description
6145	**Dimension qualifier**	M an..3	M		9 = Off-standard dimension general 10 = External equipment dimension
C211	**DIMENSIONS**	M	M		
6411	Measure unit qualifier	M an..3	M		MTR = Metre
6168	Length dimension	C n..15	O		
6140	Width dimension	C n..15	O		
6008	Height dimension	C n..15	O		

Segment Notes.

This segment is used to indicate the dimensions of the equipment identified in the EQD segment.

Example :

DIM+10+MTR:2:2:1'

SG35 - C	999 -	EQD-MEA-DIM-SEL-SG37			
SEL - C	99 -	Seal number			
Function :		To specify a seal number related to equipment.			
Segment number : 41					
		EDIFACT	EAN	*	Description
9308	**Seal number**	M an..10	M		
C215	**SEAL ISSUER**	C	R		
9303	Sealing party, coded	C an..3	R		CA = Carrier CU = Customs SH = Shipper
1131	Code list qualifier	C an..3	O		
3055	Code list responsible agency, coded	C an..3	O		
9302	Sealing party	C an..35	O		
4517	**Seal condition, coded**	C an..3	O		

Segment Notes.

This segment is used to specify a seal number for the equipment identified in the EQD segment.

Example :

SEL + 96753 + SH'

SG35 - C	999 -	EQD-MEA-DIM-SEL-SG37
SG37 - C	9 -	NAD
NAD - M	1 -	Name and address

Function : To specify the name/address and their related function, either by CO82 only and/or structured by CO80 thru 3207.

Segment number : 42

		EDIFACT	EAN	*	Description
3035	**Party qualifier**	M an..3	M		CR = Empty equipment return party CW = Equipment owner
C082	**PARTY IDENTIFICATION DETAILS**	C	A		
3039	Party id. identification	M an..35	M		EAN Location Number - Format n13
1131	Code list qualifier	C an..3	N		
3055	Code list responsible agency, coded	C an..3	R	*	9 = EAN (International Article Numbering association)
C058	**NAME AND ADDRESS**	C	N		
3124	Name and address line	M an..35			
3124	Name and address line	C an..35			
3124	Name and address line	C an..35			
3124	Name and address line	C an..35			
3124	Name and address line	C an..35			
C080	**PARTY NAME**	C	D		
3036	Party name	M an..35	M		Party Name in clear text.
3036	Party name	C an..35	O		
3036	Party name	C an..35	O		
3036	Party name	C an..35	O		
3036	Party name	C an..35	O		
3045	Party name format, coded	C an..3	O		
C059	**STREET**	C	D		
3042	Street and number/p.o. box	M an..35	M		Building Name/Number and Street
3042	Street and number/p.o. box	C an..35	O		Name and/or P.O. Box
3042	Street and number/p.o. box	C an..35	O		
3042	Street and number/p.o. box	C an..35	O		
3164	**City name**	C an..35	D		City/Town, clear text.
3229	**Country sub-entity identification**	C an..9	D		County/State in clear text.

© Copyright EAN 1997

SG37 - C	9 -	NAD
NAD - M	1 -	Name and address

Function : To specify the name/address and their related function, either by CO82 only and/or structured by CO80 thru 3207.

Segment number : 42

	EDIFACT	EAN	*	Description
3251 Postcode identification	C an..9	D		Postal Code
3207 Country, coded	C an..3	D		ISO 3166 two alpha code

Segment Notes.

This segment is used to specify the equipment owner, pick up or drop off addresses for the equipment specified in the EQD segment.

If coded address information can not be used it is recommended to use a structured address (C080 through 3207).

DE 3039: For identification of parties it is recommended to use EAN location numbers.

Example :

NAD + CR + 3323456007896::9'

Dependency Notes :

The following composites and data elements are only used when a coded name and address can not be used. The affected composites and data elements are as follows:

C080 - C059 - 3164 - 3229 - 3251 - 3207

© Copyright EAN 1997

UNT - M 1 -	MESSAGE TRAILER			
Function :	To end and check the completeness of a message.			
Segment number : 43				
	EDIFACT	EAN	*	Description
0074 Number of segments in a message	M n..6	M		The total number of segments in the message is detailed here.
0062 Message reference number	M an..14	M		The message reference numbered detailed here should equal the one specified in the UNH segment.

Segment Notes.

This segment is used to end and check the completeness of a message.

The UNT segment is a mandatory UN/EDIFACT segment. It must always be the last segment in the message.

Example :

UNT+53+ME000001'

© Copyright EAN 1997

Example of an Arrival Notice message.

The following is an example of an arrival notice message from a carrier identified by EAN location number 5411234512309 to a consignee identified by EAN location number 5412345123453.

The arrival notice message is identified by number ARN-122 and sent on the 1st of November 1997 at 10am. The message reports the impending arrival of a consignment, identified with number 10203, at the place of delivery which is a location identified by the EAN location number 5412345678908 by a truck from transport company ABC Express with license plate number ACX154. The estimated time of delivery is 2nd of November 1997 at 12.30pm. The disbursements for the consignment are German Marks 250. The consignment consists of two goods items with total number of packages being 5, specified as follows:

The first goods item consists of 2 despatch unit of which the package type is returnable pallet and which are identified with EAN SSCC´s: 354123450000000014, 354123450000000025.

The returnable pallets is said to contain 20 packages with grocery foodstuffs. The total gross weight of the 2 returnable pallets is 75 kg.

The second goods item consists of 3 despatch units of which the package type is a returnable pallet. The pallets with chilled foodstuff. The despatch units are identified with the EAN SSCC's: 354107380000001051, 354107380000001062, 354107380000001073.

The despatch units are transported at a temperature of 10 degrees Centigrade. Total gross weight of the 3 despatch units is 280 kg, however 1 despatch units weights 100, and the other 2 units weight each 90 kg.

UNH+ME002001+IFTMAN:D:96A:UN:EAN001'	Message header
BGM+781+ARN-122+9'‘	Arrival notice number ARN-122
DTM+137+199711011000:203'	Message date 11th November 1997 at 10:00
DTM+17+199711021230:203'	Estimated delivery date 2nd November 1997 at 12:30
MOA+50:250:DEM'	Amount disbursed 250 German Marks
CNT+11:5'	Total number of packages 5
LOC+7+5412345678908'	Place of delivery identified by EAN location number 5412345678908
RFF+UCN+10203'	Unique consignment reference number 10203
TDT+20++30+31+:::ABC EXPRESS+++:::ACX154'	Transported by a truck from ABC Express plates: ACX154
NAD+CN+5412345123453::9'‘	Consignee identified by EAN location number 5412345123453
NAD+CA+5411234512309::9'‘	Carrier identified by EAN location number 5411234512309
GID+1+2:09::9+20:PK'	First occurrence 2 returnable pallets of 20 packages each
FTX+AAA+++GROCERY FOODSTUFFS'	Goods description in free text
MEA+WT+G+KGM:75'	The gross weight of the goods identified in the GID is 75 Kg.
PCI+33E+354123450000000014:354123450000000025'	The pallets are marked with the EAN serial shipping container code numbers 354123450000000014 and 354123450000000025
GID+2+3:09::9'‘	Second occurrence 3 returnable pallets
TMP+2+10.0:CEL'	The transport temperature is 10 degree Celsius
FTX+AAA+++CHILLED FOODSTUFFS'	Goods description in free text
MEA+WT+G+KGM:280'	The gross weight of the goods identified in the GID is 280 Kg.
MEA+WT+AAB+KGM:100'	The unit gross weight of the goods 100 Kg.
EQN+1'	The measurement apply to just one package
MEA+WT+AAB+KGM:90'	The unit gross weight of the goods 90 Kg
EQN+2'	The measurement apply to two packages
PCI+33E+354107380000001051:354107380000001062:	The pallets are marked with the EAN SSCC's

354107380000001073'
UNT+25+ME002001' Total number of segments in the message equals 25

Note : The EDI interchange will include the UNB..UNZ segments and, if applicable, the UNG..UNE segments. (See part 1 section 2.7).

* * *