THE DELIVERY SCHEDULE MESSAGE

1. Introduction

* Status

MESSAGE TYPE	: DELFOR
REFERENCE DIRECTORY	: D.96A
EANCOM SUBSET VERSION	: 002

* Definition

A message from buyer to supplier giving product requirements regarding details for short term delivery instructions and/or medium to long term product/service forecast for planning purposes according to conditions set out in a contract or order. The message can be used to authorise the commitment of labour and materials resources. The message may also be sent by a supplier to a buyer as a response to a previously transmitted delivery schedule.

* Principles

The message may be used as a delivery schedule by the buyer to;

- specify delivery schedules requested by the buyer
- define the aspects that guarantee a perfect synchronisation between buyer and supplier
- provide information allowing the supplier to plan for future requirements in order to purchase raw materials to produce and deliver goods in the most economical way.

The message may be used as a delivery schedule response by the supplier to identify;

- the total acceptance or rejection of a previous delivery schedule message
- the total rejection of information at for individual product(s)

The Delivery Schedule message may be used in two ways :

* Location driven - a delivery location (or locations) may be provided with multiple products and delivery quantities for the location (or locations) identified.
* Product driven - a product (or products) and quantities may be identified with multiple delivery locations for the product (or products).

In EANCOM it is recommended that only one approach be adopted with each trading partner at one time.

In EANCOM the two approaches must never used within the same interchange. The approach selected must be indicated by means of the relevant data element 1001 code in the

© Copyright EAN 1997

BGM segment. **Attempting to use both approaches within one interchange may lead segment collision.**

When using the Delivery Schedule message to provide a response the message sender may indicate three types of information;

- **The total acceptance of a previous Delivery Schedule message**. In this instance only mandatory segments and segments identifying the parties and the message being responded need to be transmitted (UNH, BGM, RFF-DTM, NAD, UNS, LIN (see Note below), UNS, and UNT). The acceptance of the message is indicated using data element 1225 (code value '29, Accepted without amendment' in the BGM segment.

- **The total rejection of a previous Delivery Schedule message**. In this instance only mandatory segments and segments identifying the parties and the message being responded need to be transmitted (UNH, BGM, RFF-DTM, NAD, UNS, LIN (see Note below), UNS, and UNT). The rejection of the message is indicated using data element 1225 (code value '27, Not accepted' in the BGM segment.

- **The proposed change of information at individual product level**. Where a change or changes to a product takes place all of the information related to the product must be re-transmitted for confirmation purposes e.g. all segments at LIN level. Data element 1225 in the BGM segment must be set to '4, Change'. At product level data element 1229 in the LIN segment must be set to '3, Change'. Reference to a specific line being responded to is achieved through the use of a combination of the reference to the original document and in the RFF at detail level using DE 1156 'Line number'. The FTX segment at LIN level may be used to provide and explanation, either in coded or free form, as to why the information is being changed.

  Information at LIN level not re-transmitted is automatically accepted by default. For example, from an original Delivery Schedule containing ten four need to be changed. Only the data related to these four products must be re-transmitted and the other six products are accepted by default.

  Accepted information at product level may also be explicitly indicated using the code value '5, Accepted without amendment', in data element 1229 in the LIN segment.

Note: When using the DELFOR message to accept or reject a previous DELFOR message in full, it is recommended that a dummy LIN segment containing only data element 1082 be inserted in order to avoid a segment collision between the two UNS (both are mandatory) segments.

* * *

© Copyright EAN 1997

2. Message Structure Chart

Delivery Schedule Heading Section

UNH	1	M	1	MESSAGE HEADER
BGM	2	M	1	Beginning of message
DTM	3	M	10	Date/time/period
SG1		C	10	RFF-DTM
RFF	4	M	1	Reference
DTM	5	C	1	Date/time/period
SG2		C	20	NAD-SG3
NAD	6	M	1	Name and address
SG3		C	5	CTA-COM
CTA	7	M	1	Contact information
COM	8	C	5	Communication contact
UNS	9	M	1	SECTION CONTROL

Delivery Schedule Detail Section - Location Driven Approach

SG4		C	500	NAD-SG7-SG8
NAD	10	M	1	Name and address
SG7		C	10	TDT-DTM
TDT	11	M	1	Details of transport
DTM	12	C	5	Date/time/period
SG8		C	9999	LIN-PIA-SG10-SG12-SG14
LIN	13	M	1	Line item
PIA	14	C	10	Additional product id
SG10		C	10	RFF-DTM
RFF	15	M	1	Reference
DTM	16	C	1	Date/time/period
SG12		C	200	QTY-SCC-DTM
QTY	17	M	1	Quantity
SCC	18	C	1	Scheduling conditions
DTM	19	C	2	Date/time/period
SG14		C	50	PAC
PAC	20	M	1	Package

Delivery Schedule Detail Section - Product Driven Approach

SG18		C	9999	LIN-PIA-SG19-SG20-SG22-SG24
LIN	21	M	1	Line Item
PIA	22	C	10	Additional product id
SG19		C	10	RFF-DTM
RFF	23	M	1	Reference
DTM	24	C	1	Date/time/period

© Copyright EAN 1997

SG20		C	50	QTY-SCC-DTM
QTY	25	M	1	Quantity
SCC	26	C	1	Scheduling conditions
DTM	27	C	2	Date/time/period
SG22		C	10	PAC
PAC	28	M	1	Package
SG24		C	500	NAD-SG31
NAD	29	M	1	Name and address
SG31		C	10	TDT-DTM
TDT	30	M	1	Details of transport
DTM	31	C	5	Date/time/period

Delivery Schedule Summary Section

UNS	32	M	1	SECTION CONTROL
CNT	33	C	5	Control total
FTX	34	C	5	Free text
UNT	35	M	1	MESSAGE TRAILER

* * *

© Copyright EAN 1997

3. Branching Diagram

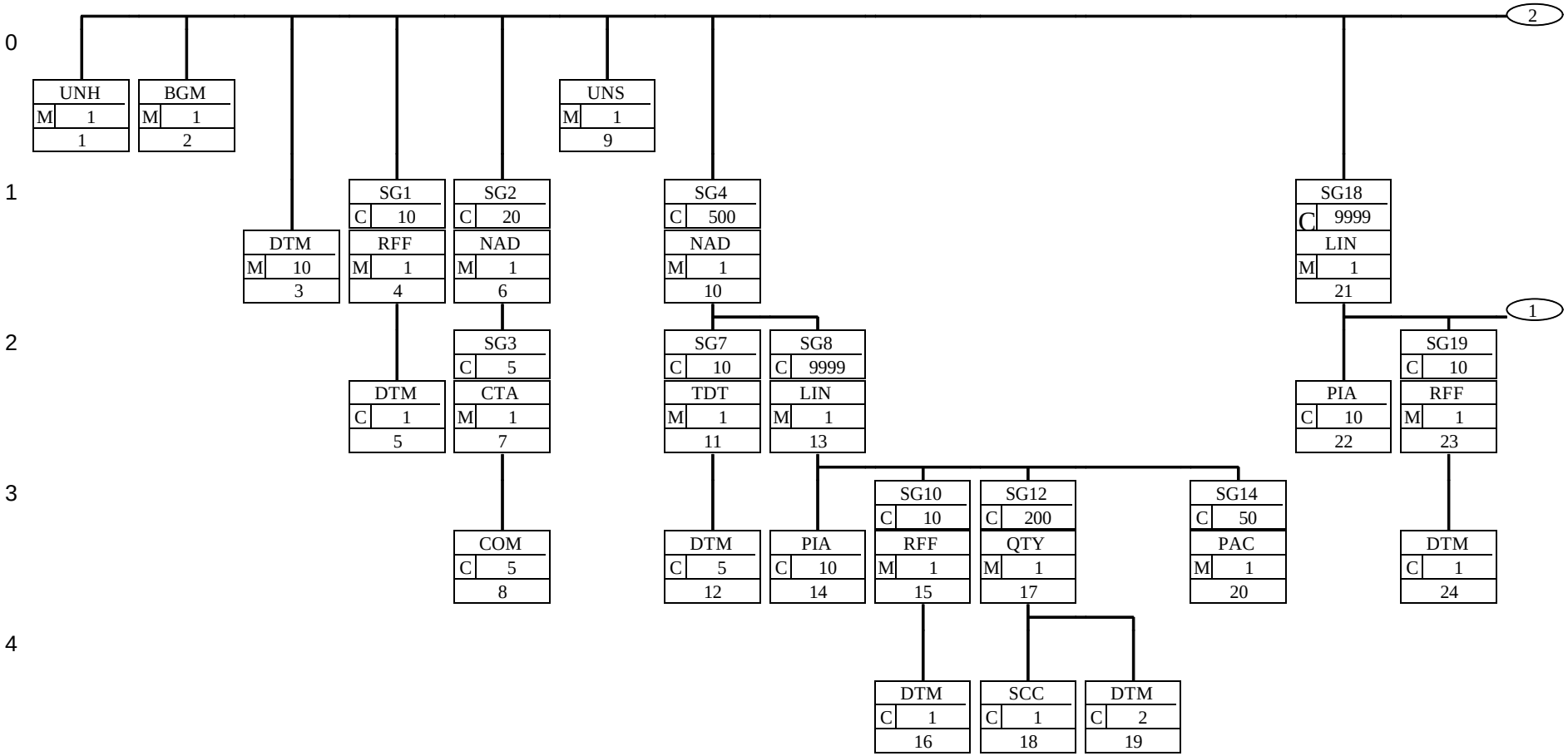

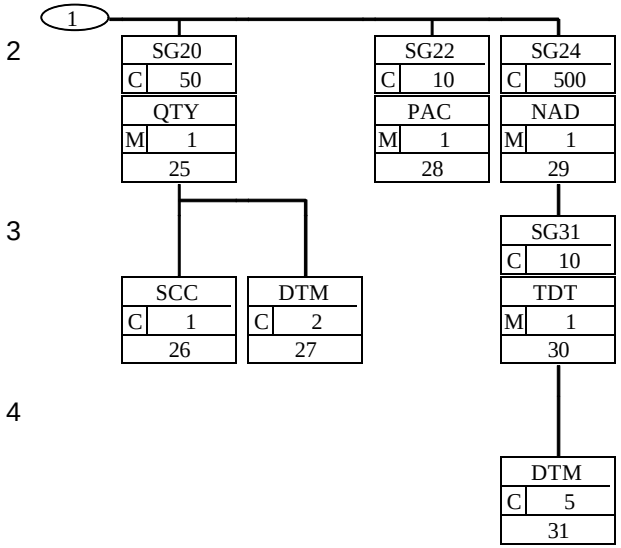
1
2
3
4
SG20
C 50
QTY
M 1
25
SCC
C 1
26
DTM
C 2
27
SG22
C 10
PAC
M 1
28
SG24
C 500
NAD
M 1
29
SG31
C 10
TDT
M 1
30
DTM
C 5
31

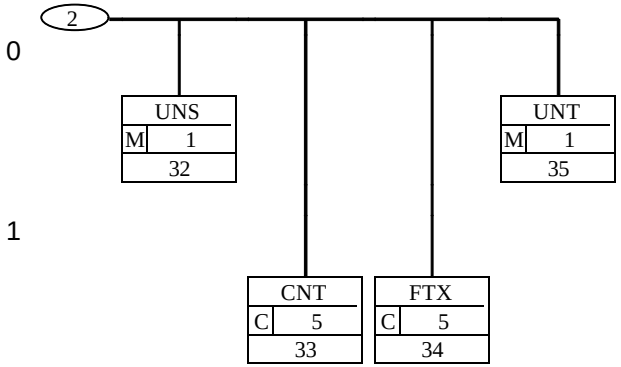
2
0
UNS
M 1
32
UNT
M 1
35
1
CNT
C 5
33
FTX
C 5
34

4. Segments Description

Delivery Schedule Heading Section

UNH - M 1 - MESSAGE HEADER
This segment is used to head, identify and specify a message.

BGM - M 1 - Beginning of message
This segment is used to indicate the type and function of a message and to transmit the identifying number.

DTM - M 10 - Date/time/period
This segment is used to specify the date of the Delivery Schedule message.

SG1 - C 10 - RFF-DTM
A group of segments giving references relevant to the whole message, e.g. contract number.

RFF - M 1 - Reference
This segment is used to identify additional references relevant to the whole Delivery Schedule.

DTM - C 1 - Date/time/period
This segment is used to indicate any dates associated with the references provided in the previous RFF segment.

SG2 - C 20 - NAD-SG3
A group of segments identifying names, addresses and contacts relevant to the whole Delivery Schedule.

NAD - M 1 - Name and address
This segment is used to indicate the trading parties involved in the Delivery Schedule process. Identification of buyer and supplier is mandatory in the delivery schedule. Additionally, the consignee and invoicee may also be specified if different to the buyer and supplier.

SG3 - C 5 - CTA-COM
A group of segments to identify people, functions, or departments and appropriate numbers to whom communication should be directed.

CTA - M 1 - Contact information
This segment is used to identify department and/or contact names within the party specified in the previous NAD segment. The EAN location number is particularly suitable for this purpose.

COM - C 5 - Communication contact
This segment identifies the communications number, and type of communications, for the department or person identified in the previous CTA segment.

UNS - M 1 - SECTION CONTROL
This segment is used to separate the heading and detail sections of the DELFOR message.

© Copyright EAN 1997

Delivery Schedule Detail Section - Location Driven Approach

SG4 - C 500 - NAD-SG7-SG8
A group containing delivery names and addresses, related information and details of line items to be consigned to the delivery points.

NAD - M 1 - Name and address
This segment is the trigger segment to the location driven delivery schedule. By choosing this approach (specified in BGM segment data element 1001, value 41E or 28E) the product driven approach is automatically excluded.

SG7 - C 10 - TDT-DTM
A group of segments specifying details of the mode and means of transport, and date/time of departure and destination relating to specified delivery point.

TDT - M 1 - Details of transport
This segment is used to specify transport details for the delivery schedule. If successive stages of transport need to be identified, then segment group 7 will be repeated for each successive stage, e.g., on-carriage, etc.,.

DTM - C 5 - Date/time/period
This segment is used to specify dates and times relevant to the previous TDT segment.

SG8 - C 9999 - LIN-PIA-SG10-SG12-SG14
A group of segments providing details of the individual line items for the specified delivery point.

LIN - M 1 - Line item
This segment is used to identify the product or service for which the schedule or forecast is being provided.

PIA - C 10 - Additional product id
This segment is used to specify additional or substitutional item identification codes such as a buyer's or supplier's item number.

SG10 - C 10 - RFF-DTM
A group of segments giving references related to the line item and where necessary, their dates.

RFF - M 1 - Reference
This segment is used to provide reference numbers which provide further identification of each line item in the delivery schedule.

DTM - C 1 - Date/time/period
This segment is used to indicate any dates associated with the references provided in the previous RFF segment.

© Copyright EAN 1997

SG12 - C 200 - QTY-SCC-DTM
A group of segments specifying quantity related information for actual delivery, reporting or cumulative quantities and forecast quantities as required for the line item.

QTY - M 1 - Quantity
This segment is used to specify quantities related to for the current line item.

SCC - C 1 - Scheduling conditions
This segment is used to specify the type and status of the schedule being given, and optionally defining a pattern to be established, e.g., firm or proposed delivery schedule for a weekly pattern.

DTM - C 2 - Date/time/period
This segment is used to provide dates and times relating to the quantity and schedule details in the QTY/SCC segments. This segment may indicate date/time ranges, e.g., the start and end date for a delivery pattern, etc.

SG14 - C 50 - PAC
A group of segments identifying the packaging, physical dimensions, and marks and numbers for goods referenced in the line item to be delivered.

PAC - M 1 - Package
This segment is used to provide packaging details for the current line item.

Delivery Schedule Detail Section - Product Driven Approach

SG18 - C 9999 - LIN-PIA-SG19-SG20-SG22-SG24
The detail section consists of two main Segment groups, Segment group 4 and Segment group 18. The use of Segment group 18 assumes that Segment group 4 has not been used.

LIN - M 1 - Line item
The LIN segment in segment group 18 is the trigger segment to the product driven delivery schedule. By choosing this approach (specified in the BGM segment data element 1001, value 42E) the location driven approach is automatically excluded. This segment is used to identify the product or service for which the schedule or forecast is being provided.

PIA - C 10 - Additional product id
This segment is used to specify additional or substitutional item identification codes such as a buyer's or supplier's item number.

SG19 - C 10 - RFF-DTM
A group of segment giving references related to the line item and where necessary, their dates.

RFF - M 1 - Reference
This segment is used to provide reference numbers which provide further identification of each line item in the delivery schedule.

© Copyright EAN 1997

THE DELIVERY SCHEDULE

DTM - C 1 - Date/time/period
This segment is used to indicate any dates associated with the references provided in the previous RFF segment.

SG20 - C 50 - QTY-SCC-DTM
A group of segments specifying quantity related information for actual delivery, reporting or cumulative quantities and forecast quantities as required for the line item.

QTY - M 1 - Quantity
This segment is used to specify quantities related to for the current line item.

SCC - C 1 - Scheduling conditions
This segment is used to specify the type and status of the schedule being given, and optionally defining a pattern to be established, e.g., firm or proposed delivery schedule for a weekly pattern.

DTM - C 2 - Date/time/period
This segment is used to provide dates and times relating to the quantity and schedule details in the QTY/SCC segments. This segment may indicate date/time ranges, e.g., the start and end date for a delivery pattern, etc.

SG22 - C 10 - PAC
A group of segments identifying the packaging, physical dimensions, and marks and numbers for goods referenced in the line item to be delivered.

PAC - M 1 - Package
This segment is used to provide packaging details for the current line item.

SG24 - C 500 - NAD-SG31
A group of segments providing details of the individual delivery points.

NAD - M 1 - Name and address
This segment is used to identify the delivery points for a product driven delivery schedule. The delivery address

SG31 - C 10 - TDT-DTM
A group of segments specifying details of the mode and means of transport, and date/time of departure and destination relating to the specified location.

TDT - M 1 - Details of transport
This segment is used to specify transport details for the delivery schedule. If successive stages of transport need to be identified, then segment group 31 will be repeated for each successive stage, e.g., on-carriage, etc.,.

DTM - C 5 - Date/time/period
This segment is used to specify dates and times relevant to the previous TDT segment.

© Copyright EAN 1997

Delivery Schedule Summary Section

UNS - M 1 - SECTION CONTROL
This segment is used as a separator between the message detail section and the message summary section.

CNT - C 5 - Control total
This segment is used to provide message control totals.

FTX - C 5 - Free text
This segment is used to specify any free text information relevant to the Delivery Schedule message.

UNT - M 1 - MESSAGE TRAILER
This segment is a mandatory UN/EDIFACT segment. It must always be the last segment in the message.

* * *

© Copyright EAN 1997

5. Segments Layout

This section describes each segment used in the EANCOM Delivery Schedule message. The original EDIFACT segment layout is listed. The appropriate comments relevant to the EANCOM subset are indicated.

Notes:

1. The segments are presented in the sequence in which they appear in the message. The segment or segment group tag is followed by the (M)andatory / (C)onditional indicator, the maximum number of occurrences and the segment description.

2. Reading from left to right, in column one, the data element tags and descriptions are shown, followed by in the second column the EDIFACT status (M or C), the field format, and the picture of the data elements. These first pieces of information constitute the original EDIFACT segment layout.

   Following the EDIFACT information, EANCOM specific information is provided in the third, fourth, and fifth columns. In the third column a status indicator for the use of (C)onditional EDIFACT data elements (see 2.1 through 2.3 below), in the fourth column the restricted indicator (see point 3 on the following page), and in the fifth column notes and code values used for specific data elements in the message.

2.1 (**M**)andatory data elements in EDIFACT segments retain their status in EANCOM.

2.2 Additionally, there are five types of status for data elements with a (C)onditional EDIFACT status, whether for simple, component or composite data elements. These are listed below and can be identified when relevant by the following abbreviations:

-	REQUIRED	**R**	Indicates that the entity is required and must be sent.
-	ADVISED	**A**	Indicates that the entity is advised or recommended.
-	DEPENDENT	**D**	Indicates that the entity must be sent in certain conditions, as defined by the relevant explanatory note.
-	OPTIONAL	**O**	Indicates that the entity is optional and may be sent at the discretion of the user.
-	NOT USED	**N**	Indicates that the entity is not used and should be omitted.

© Copyright EAN 1997

2.3 If a composite is flagged as **N, NOT USED**, all data elements within that composite will have blank status indicators assigned to them.

3. Status indicators detailed in the fourth column which directly relate to the code values detailed in the fifth column may have two values;

- RESTRICTED ***** A data element marked with an asterix (*) in the fourth column indicates that the listed codes in column five are the only codes available for use with this data element, in this segment, in this message.

- OPEN All data elements where coded representation of data is possible and a restricted set of code values is not indicated are open (no asterix in fourth column). The available codes are listed in the EANCOM Data Elements and Code Sets Directory. Code values may be given as examples or there may be a note on the format or type of code to be used.

* * *

© Copyright EAN 1997

UNH - M 1 -	MESSAGE HEADER			
Function :	To head, identify and specify a message.			
Segment number : 1				
	EDIFACT	EAN	*	Description
0062 Message reference number	M an..14	M		Senders unique message reference. Sequence number of messages in the interchange. DE 0062 in the UNT will have the same value. Sender generated.
S009 MESSAGE IDENTIFIER	M	M		
0065 Message type identifier	M an..6	M	*	DELFOR = Delivery schedule message
0052 Message type version number	M an..3	M	*	D = Draft directory
0054 Message type release number	M an..3	M	*	96A = Version 96A
0051 Controlling agency	M an..2	M	*	UN = UN/ECE/TRADE/WP.4, United Nations Standard Messages (UNSM)
0057 Association assigned code	C an..6	R	*	EAN002 = EAN Version control number.
0068 Common access reference	C an..35	N		
S010 STATUS OF THE TRANSFER	C	N		
0070 Sequence message transfer number	M n..2			
0073 First/last sequence message transfer indication	C a1			

Segment Notes.

This segment is used to head, identify and specify a message.

DE's 0065, 0052, 0054, and 0051: Indicate that the message is a UNSM Delivery Schedule message based on the D.96A directory under the control of the United Nations.

DE 0057: Indicates that the message is the EANCOM version 002 of the UNSM Delivery Schedule.

Example :

UNH+ME000001+DELFOR:D:96A:UN:EAN002'

© Copyright EAN 1997

BGM - M	1 -	Beginning of message
Function	:	To indicate the type and function of a message and to transmit the identifying number.
Segment number	:	2

		EDIFACT	EAN	*	Description
C002	**DOCUMENT/MESSAGE NAME**	C	R		
1001	Document/message name, coded	C an..3	R		26E = Delivery forecast (EAN Code) 28E = Location delivery schedule response (EAN Code) 29E = Product delivery schedule response (EAN Code) 41E = Location delivery schedule (EAN Code) 42E = Product delivery schedule (EAN Code)
1131	Code list qualifier	C an..3	N		
3055	Code list responsible agency, coded	C an..3	R	*	9 = EAN (International Article Numbering association)
1000	Document/message name	C an..35	O		
1004	**Document/message number**	C an..35	R		Delivery schedule number assigned by the sender.
1225	**Message function, coded**	C an..3	R	*	1 = Cancellation 4 = Change 7 = Duplicate 9 = Original 27 = Not accepted 29 = Accepted without amendment 31 = Copy 42 = Confirmation via specific means
4343	**Response type, coded**	C an..3	D	*	AC = Acknowledge - with detail and change AI = Acknowledge only changes NA = No acknowledgement needed

Segment Notes.

This segment is used to indicate the type and function of a message and to transmit the identifying number.

DE 1001: In the Delivery Schedule message there are two possible approaches to using the message (detailed in section 1). As the two types of approach may not be mixed in the same interchange it is necessary to positively state which approach is being used by means of the Document/message name, coded data element.

DE 1225: The message function, coded is a critical data element in this segment. It applies to all data indicated in the message. Code values 27, and 29 are used only when the message is sent as delivery schedule response. The following definitions apply for the restricted codes:

1 = Cancellation - A cancellation of a previously sent delivery schedule. The previous delivery schedule number is specified in the RFF segment.

4 = Change - A change to a previously sent delivery schedule. Only the area's changing need to be re-transmitted. The previous delivery schedule number is specified in the RFF segment.

BGM - M	1 -	Beginning of message
Function :		To indicate the type and function of a message and to transmit the identifying number.
Segment number : 2		

7 = Duplicate - A re-transmission involving the same parties, on the specific request of the receiver.

9 = Original - An original transmission of a delivery schedule.

27 = Not accepted - Message to inform that the referenced message is not accepted by the recipient. The previous delivery schedule number is specified in the RFF segment.

29 = Accepted without amendment - Referenced message is entirely accepted. The previous delivery schedule number is specified in the RFF segment.

31 = Copy - A copy of a delivery schedule for a third party for information purposes.

42 = Confirmation via specific means - A confirmation of a previous delivery schedule sent by means other than EDI, e.g., Fax.

Example :

BGM+41E::9+LDS562+9'

Indicates a location driven delivery schedule.

BGM+42E::9+PDS416+42'

Indicates a product driven delivery schedule being sent as confirmation to a schedule previously sent by means other than EDI.

Dependency Notes :

DE 4343: The data element is used if the delivery schedule issuer wishes to explicitly indicate whether an acknowledgement is required or not.

© Copyright EAN 1997

DTM - M	10 -	Date/time/period
Function	:	To specify date, and/or time, or period.
Segment number	:	3

	EDIFACT	EAN	*	Description
C507 DATE/TIME/PERIOD	M	M		
2005 Date/time/period qualifier	M an..3	M	*	2 = Delivery date/time, requested 61 = Cancel if not delivered by this date 63 = Delivery date/time, latest 64 = Delivery date/time, earliest 69 = Delivery date/time, promised for 137 = Document/message date/time
2380 Date/time/period	C an..35	R		
2379 Date/time/period format qualifier	C an..3	R		102 = CCYYMMDD 203 = CCYYMMDDHHMM 718 = CCYYMMDD-CCYYMMDD

Segment Notes.

This segment is used to specify the date of the Delivery Schedule message.

DE 2005: Identification of the 'Document/message date/time' (code value 137) is mandatory in the delivery schedule.

Example :

DTM+137:19970110:102'

DTM+69:199701201230:203'

Delivery is promised for 12:30pm on the 20th of January 1997.

SG1 - C	10 -	RFF-DTM	
RFF - M	1 -	Reference	
Function :		To specify a reference.	
Segment number : 4			

	EDIFACT	EAN	*	Description
C506 REFERENCE	M	M		
1153 Reference qualifier	M an..3	M	*	AAN = Delivery schedule number BO = Blanket order number CR = Customer reference number CT = Contract number IP = Import licence number ON = Order number (buyer) VN = Order number (supplier)
1154 Reference number	C an..35	R		
1156 Line number	C an..6	N		
4000 Reference version number	C an..35	N		

Segment Notes.

This segment is used to identify additional references relevant to the whole Delivery Schedule.

DE 1153: Code value AAN is used in combination with any of the following codes: 1, 4, 27, 29; of DE 1225 in the
BGM segment.

Example :

RFF+CT:563288'

SG1 - C	10 -	RFF-DTM			
DTM - C	1 -	Date/time/period			
Function :		To specify date, and/or time, or period.			
Segment number : 5					
		EDIFACT	EAN	*	Description
C507	**DATE/TIME/PERIOD**	M	M		
2005	Date/time/period qualifier	M an..3	M	*	36 = Expiry date 171 = Reference date/time 194 = Start date/time 206 = End date/time
2380	Date/time/period	C an..35	R		
2379	Date/time/period format qualifier	C an..3	R		102 = CCYYMMDD 203 = CCYYMMDDHHMM

Segment Notes.

This segment is used to indicate any dates associated with the references provided in the previous RFF segment.

Example :

DTM+171:19970115:102'

SG2 - C	20 -	NAD-SG3	
NAD - M	1 -	Name and address	
Function :		To specify the name/address and their related function, either by CO82 only and/or structured by CO80 thru 3207.	
Segment number : 6			

		EDIFACT	EAN	*	Description
3035	**Party qualifier**	M an..3	M		BY = Buyer CN = Consignee FW = Freight forwarder IV = Invoicee SU = Supplier WH = Warehouse keeper
C082	**PARTY IDENTIFICATION DETAILS**	C	A		
3039	Party id. identification	M an..35	M		EAN Location Number - Format n13
1131	Code list qualifier	C an..3	N		
3055	Code list responsible agency, coded	C an..3	R	*	9 = EAN (International Article Numbering association)
C058	**NAME AND ADDRESS**	C	N		
3124	Name and address line	M an..35			
3124	Name and address line	C an..35			
3124	Name and address line	C an..35			
3124	Name and address line	C an..35			
3124	Name and address line	C an..35			
C080	**PARTY NAME**	C	D		
3036	Party name	M an..35	M		Party Name, clear text
3036	Party name	C an..35	O		
3036	Party name	C an..35	O		
3036	Party name	C an..35	O		
3036	Party name	C an..35	O		
3045	Party name format, coded	C an..3	O		
C059	**STREET**	C	D		
3042	Street and number/p.o. box	M an..35	M		Building Name/Number and Street name
3042	Street and number/p.o. box	C an..35	O		
3042	Street and number/p.o. box	C an..35	O		
3042	Street and number/p.o. box	C an..35	O		
3164	**City name**	C an..35	D		City/Town name, clear text
3229	**Country sub-entity identification**	C an..9	D		County/State, clear text
3251	**Postcode identification**	C an..9	D		Postal Code
3207	**Country, coded**	C an..3	D		ISO 3166 two alpha

© Copyright EAN 1997

SG2 - C	20 -	NAD-SG3
NAD - M	1 -	Name and address
Function :		To specify the name/address and their related function, either by CO82 only and/or structured by CO80 thru 3207.
Segment number : 6		

Segment Notes.

This segment is used to indicate the trading parties involved in the Delivery Schedule process. Identification of buyer and supplier is mandatory in the delivery schedule. Additionally, the consignee and invoicee may also be specified if different to the buyer and supplier.

If coded address information can not be used it is recommended to use a structured address (C080 through 3207).

Example :

NAD + BY + 5412345000013::9'
NAD + SU + 4012345500004::9'
NAD + CN + 5412345600015::9'

Dependency Notes :

The following composites and data elements are only used when a coded name and address can not be used. The affected composites and data elements are as follows:

C080 - C059 - 3164 - 3229 - 3251 - 3207

SG2 - C	20 -	NAD-SG3
SG3 - C	5 -	CTA-COM
CTA - M	1 -	Contact information

Function : To identify a person or a department to whom communication should be directed.
Segment number : 7

		EDIFACT	EAN	*	Description
3139	**Contact function, coded**	C an..3	R		IC = Information contact OC = Order contact PD = Purchasing contact
C056	**DEPARTMENT OR EMPLOYEE DETAILS**	C	O		
3413	Department or employee identification	C an..17	O		
3412	Department or employee	C an..35	O		

Segment Notes.

This segment is used to identify department and/or contact names within the party specified in the previous NAD segment. The EAN location number is particularly suitable for this purpose.

Example :

CTA+IC+SUPPLY DEPARTMENT:D REES'

© Copyright EAN 1997

SG2 - C	20 -	NAD-SG3
SG3 - C	5 -	CTA-COM
COM - C	5 -	Communication contact

Function : To identify a communication number of a department or a person to whom communication should be directed.

Segment number : 8

	EDIFACT	EAN	*	Description
C076 COMMUNICATION CONTACT	M	M		
3148 Communication number	M an..512	M		
3155 Communication channel qualifier	M an..3	M		EM = Electronic mail FX = Fax TE = Telephone TL = Telex XF = X.400

Segment Notes.

This segment identifies the communications number, and type of communications, for the department or person identified in the previous CTA segment.

Example :

COM+0033185626232:FX'

UNS - M 1 - SECTION CONTROL				
Function : To separate header, detail, and summary sections of a message. Segment number : 9				
	EDIFACT	EAN	*	Description
0081 Section identification	M a1	M	*	D = Header/detail section separation

Segment Notes.

This segment is used to separate the heading and detail sections of the DELFOR message.

Example :

UNS + D'

SG4 - C	500 -	NAD-SG7-SG8	
NAD - M	1 -	Name and address	
Function :		To specify the name/address and their related function, either by CO82 only and/or structured by CO80 thru 3207.	
Segment number : 10			

		EDIFACT	EAN	*	Description
3035	**Party qualifier**	M an..3	M	*	DP = Delivery party
C082	**PARTY IDENTIFICATION DETAILS**	C	A		
3039	Party id. identification	M an..35	M		EAN Location Number - Format n13
1131	Code list qualifier	C an..3	N		
3055	Code list responsible agency, coded	C an..3	R	*	9 = EAN (International Article Numbering association)
C058	**NAME AND ADDRESS**	C	N		
3124	Name and address line	M an..35			
3124	Name and address line	C an..35			
3124	Name and address line	C an..35			
3124	Name and address line	C an..35			
3124	Name and address line	C an..35			
C080	**PARTY NAME**	C	D		
3036	Party name	M an..35	M		Party Name, clear text
3036	Party name	C an..35	O		
3036	Party name	C an..35	O		
3036	Party name	C an..35	O		
3036	Party name	C an..35	O		
3045	Party name format, coded	C an..3	O		
C059	**STREET**	C	D		
3042	Street and number/p.o. box	M an..35	M		Building Name/Number and Street name
3042	Street and number/p.o. box	C an..35	O		
3042	Street and number/p.o. box	C an..35	O		
3042	Street and number/p.o. box	C an..35	O		
3164	**City name**	C an..35	D		City/Town name, clear text
3229	**Country sub-entity identification**	C an..9	D		County/State, clear text
3251	**Postcode identification**	C an..9	D		Postal Code
3207	**Country, coded**	C an..3	D		ISO 3166 two alpha code

Segment Notes.

This segment is the trigger segment to the location driven delivery schedule. By choosing this approach (specified in BGM segment data element 1001, value 41E or 28E) the product driven approach is automatically excluded.

SG4 - C	500 -	NAD-SG7-SG8
NAD - M	1 -	Name and address
Function :		To specify the name/address and their related function, either by CO82 only and/or structured by CO80 thru 3207.
Segment number : 10		

Please refer to the notes in the message principles section for more information on the rules regarding the two approaches.

This NAD segment is used to identify the delivery points for a location driven delivery schedule. The delivery address given at this point in the message is valid for all following products which are identified in the LIN-PIA segments.

If coded address information can not be used it is recommended to use a structured address (C080 through 3207).

Example :

NAD + DP + 5412345000013::9'

Dependency Notes :

The following composites and data elements are only used when a coded name and address can not be used. The affected composites and data elements are as follows:

C080 - C059 - 3164 - 3229 - 3251 - 3207

SG4	- C	500 -	NAD-SG7-SG8
SG7	- C	10 -	TDT-DTM
TDT	- M	1 -	Details of transport

Function : To specify the transport details such as mode of transport, means of transport, its conveyance reference number and the identification of the means of transport.

Segment number : 11

		EDIFACT	EAN	*	Description
8051	**Transport stage qualifier**	M an..3	M		10 = Pre-carriage transport 20 = Main-carriage transport 30 = On-carriage transport
8028	**Conveyance reference number**	C an..17	O		Reference number covering the transport.
C220	**MODE OF TRANSPORT**	C	R		
8067	Mode of transport, coded	C an..3	R		10 = Maritime transport 20 = Rail transport 30 = Road transport 40 = Air transport 50 = Mail
8066	Mode of transport	C an..17	N		
C228	**TRANSPORT MEANS**	C	O		
8179	Type of means of transport identification	C an..8	D		12 = Ship tanker 21 = Rail tanker 23 = Rail bulk car 25 = Rail express 31 = Truck 32 = Road tanker
8178	Type of means of transport	C an..17	D		
C040	**CARRIER**	C	O		
3127	Carrier identification	C an..17	A		EAN Location Number - Format n13
1131	Code list qualifier	C an..3	O		
3055	Code list responsible agency, coded	C an..3	R	*	9 = EAN (International Article Numbering association)
3128	Carrier name	C an..35	O		
8101	**Transit direction, coded**	C an..3	O		BS = Buyer to supplier SB = Supplier to buyer
C401	**EXCESS TRANSPORTATION INFORMATION**	C	N		
8457	Excess transportation reason, coded	M an..3			
8459	Excess transportation responsibility, coded	M an..3			
7130	Customer authorization number	C an..17			
C222	**TRANSPORT IDENTIFICATION**	C	O		
8213	Id. of means of transport identification	C an..9	N		

© Copyright EAN 1997

SG7 - C	10 -	TDT-DTM
TDT - M	1 -	Details of transport

Function : To specify the transport details such as mode of transport, means of transport, its conveyance reference number and the identification of the means of transport.

Segment number : 11

		EDIFACT	EAN	*	Description
1131	Code list qualifier	C an..3	N		
3055	Code list responsible agency, coded	C an..3	N		
8212	Id. of the means of transport	C an..35	R		Vehicle licence plate/Aircraft number
8453	Nationality of means of transport, coded	C an..3	O		ISO 3166 two alpha code
8281	**Transport ownership, coded**	C an..3	N		

Segment Notes.

This segment is used to specify transport details for the delivery schedule. If successive stages of transport need to be identified, then segment group 7 will be repeated for each successive stage, e.g.,on-carriage, etc,.

Example :

TDT+20++30+31'

Main carriage transport by road using a truck.

TDT+20+TD03233+30+31+:::SWIFT FREIGHT FORWARDERS+++:::CX146EU:NL'

The main carriage transport is by road using a truck from the carrier Swift Freight Forwarders. The reference number covering the transport is TD03233 and the licence plate number of the truck is CX146EU, a Netherlands licence plate number.

Dependency Notes :

Data elements 8179 and 8178 are only used when the type of transport must be specifically identified, that is, a generic description such as road transport is unsuitable.

© Copyright EAN 1997

SG4	- C	500 -	NAD-SG7-SG8
SG7	- C	10 -	TDT-DTM
DTM	- C	5 -	Date/time/period

Function : To specify date, and/or time, or period.
Segment number : 12

	EDIFACT	EAN	*	Description
C507 DATE/TIME/PERIOD	M	M		
2005 Date/time/period qualifier	M an..3	M	*	2 = Delivery date/time, requested 63 = Delivery date/time, latest 64 = Delivery date/time, earliest 69 = Delivery date/time, promised for
2380 Date/time/period	C an..35	R		
2379 Date/time/period format qualifier	C an..3	R		102 = CCYYMMDD 203 = CCYYMMDDHHMM 718 = CCYYMMDD-CCYYMMDD

Segment Notes.

This segment is used to specify dates and times relevant to the previous TDT segment.

Example :

DTM+63:199701211430:203'

SG4	- C	500 -	NAD-SG7-SG8
SG8	- C	9999 -	LIN-PIA-SG10-SG12-SG14
LIN	- M	1 -	Line item

Function : To identify a line item and configuration.
Segment number : 13

		EDIFACT	EAN	*	Description
1082	**Line item number**	C n..6	R		Application generated number of the count of the lines in the location driven delivery schedule.
1229	**Action request/notification, coded**	C an..3	O		3 = Changed 4 = No action 5 = Accepted without amendment 7 = Not accepted
C212	**ITEM NUMBER IDENTIFICATION**	C	D		
7140	Item number	C an..35	R		Format n..14 EAN-8, UPC-A, EAN-13, or DUN-14 - this is the number of the article scheduled for delivery.
7143	Item number type, coded	C an..3	R	*	EN = International Article Numbering Association (EAN) UP = UPC (Universal product code)
1131	Code list qualifier	C an..3	N		
3055	Code list responsible agency, coded	C an..3	O		
C829	**SUB-LINE INFORMATION**	C	D		
5495	Sub-line indicator, coded	C an..3	R	*	1 = Sub-line information
1082	Line item number	C n..6	R		
1222	**Configuration level**	C n..2	N		
7083	**Configuration, coded**	C an..3	D		A = Added to the configuration D = Deleted from the configuration I = Included in the configuration

Segment Notes.

This segment is used to identify the product or service for which the schedule or forecast is being provided.

Example :

LIN+1++5412345111115:EN'

Dependency Notes :

DE C212: This composite will only be used for the identification of EAN/UPC codes. If another coding structure is
required, e.g., HIBC, this composite will not be used and the code will be detailed in the PIA segment.

DE C829 and 7083: These data elements are only used when sub-lines are required.

FOR A COMPLETE DESCRIPTION ON THE USAGE OF SUB-LINES PLEASE REFER TO PART I,

SG8 - C	9999 -	LIN-PIA-SG10-SG12-SG14
LIN - M	1 -	Line item
Function :		To identify a line item and configuration.
Segment number : 13		
SECTION 4.11 .		

SG4	- C	500 -	NAD-SG7-SG8
SG8	- C	9999 -	LIN-PIA-SG10-SG12-SG14
PIA	- C	10 -	Additional product id

Function : To specify additional or substitutional item identification codes.
Segment number : 14

		EDIFACT	EAN	*	Description
4347	**Product id. function qualifier**	M an..3	M	*	1 = Additional identification 2 = Identification for potential substitution 5 = Product identification 9 = No substitution accepted (EAN Code)
C212	**ITEM NUMBER IDENTIFICATION**	M	M		
7140	Item number	C an..35	R		
7143	Item number type, coded	C an..3	R		AC = HIBC (Health Industry Bar Code) EN = International Article Numbering Association (EAN) HS = Harmonised system IB = ISBN (International Standard Book Number) IN = Buyer's item number PV = Promotional variant number SA = Supplier's article number
1131	Code list qualifier	C an..3	N		
3055	Code list responsible agency, coded	C an..3	O		9 = EAN (International Article Numbering association) 91 = Assigned by supplier or supplier's agent 92 = Assigned by buyer or buyer's agent
C212	**ITEM NUMBER IDENTIFICATION**	C	O		
7140	Item number	C an..35	R		
7143	Item number type, coded	C an..3	R		
1131	Code list qualifier	C an..3	N		
3055	Code list responsible agency, coded	C an..3	O		
C212	**ITEM NUMBER IDENTIFICATION**	C	O		
7140	Item number	C an..35	R		
7143	Item number type, coded	C an..3	R		
1131	Code list qualifier	C an..3	N		
3055	Code list responsible agency, coded	C an..3	O		
C212	**ITEM NUMBER IDENTIFICATION**	C	O		
7140	Item number	C an..35	R		
7143	Item number type, coded	C an..3	R		

© Copyright EAN 1997

SG8 - C	9999 -	LIN-PIA-SG10-SG12-SG14	
PIA - C	10 -	Additional product id	

Function : To specify additional or substitutional item identification codes.
Segment number : 14

		EDIFACT	EAN	*	Description
1131	Code list qualifier	C an..3	N		
3055	Code list responsible agency, coded	C an..3	O		
C212	**ITEM NUMBER IDENTIFICATION**	C	O		
7140	Item number	C an..35	R		
7143	Item number type, coded	C an..3	R		
1131	Code list qualifier	C an..3	N		
3055	Code list responsible agency, coded	C an..3	O		

Segment Notes.

This segment is used to specify additional or substitutional item identification codes such as a buyer's or supplier's item number.

DE 4347: Product Id function qualifier has the following restricted coded values:

1 - Additional Identification - To provide an additional identity for the product identified in the LIN segment. The additional identification can consist of :

A supplemental identification which provides more information complementary to the main article number provided
in the LIN segment, e.g., a batch number, promotional variant number, product group number, etc,.

An alternative identification which may be used instead of the main article number provided in the LIN segment, e.
g., a buyers article number, an HIBC code, etc,.

2 - Identification for substitution - To provide the article number of a product which can substitute the product identified by the article number provided in the LIN segment when the latter is temporarily unavailable, e.g., a similar or identical product coded with a different EAN number (article coded in a different country), a different size unit of the same product, a similar product with for example a different brand name.

5 - Product Identification - To provide an additional product identification which is of equal importance or significance to the code provided in the LIN segment.

9 - No substitution accepted - The buyer will not accept any other product code than the one specified in the LIN segment. The code specified in the LIN segment is repeated in the PIA segment to confirm the only code acceptable.

Example:

PIA + 1 + TC56332:IN'

In this example the PIA segment is used to provide an additional identification to the article number provided in the
LIN segment. The EAN article number 5412345111115 provided in the LIN segment refers to the internal buyer's part number TC56332.

PIA + 2 + 4000862141664:EN'

© Copyright EAN 1997

SG8	- C	9999 -	LIN-PIA-SG10-SG12-SG14
PIA	- C	10 -	Additional product id

Function : To specify additional or substitutional item identification codes.
Segment number : 14

In this example the PIA segment is used to provide an article number identification for substitution. The product identified in the LIN segment by the EAN article number 5412345111115 can be substituted by the product identified in the PIA segment by the EAN article number 4000862141664 in case the former is not available.

PIA+5+5412345123453:EN'

In this example the EAN article number 5412345123453 is included to indicate that it is of equal importance or significance to the EAN article number 5412345111115 specified in the LIN segment.

PIA+9+5412345111115:EN'

This example details the situation where the buyer explicitly specifies that no other product is acceptable but the one specified in the LIN segment. The PIA re-specifies the product code from the LIN segment.

© Copyright EAN 1997

SG4	- C	500 -	NAD-SG7-SG8
SG8	- C	9999 -	LIN-PIA-SG10-SG12-SG14
SG10	- C	10 -	RFF-DTM
RFF	- M	1 -	Reference

Function : To specify a reference.
Segment number : 15

	EDIFACT	EAN	*	Description
C506 REFERENCE	M	M		
1153 Reference qualifier	M an..3	M		CT = Contract number
1154 Reference number	C an..35	R		
1156 Line number	C an..6	O		
4000 Reference version number	C an..35	N		

Segment Notes.

This segment is used to provide reference numbers which provide further identification of each line item in the delivery schedule.

Example :

RFF+CT:652744'

SG4	- C	500 -	NAD-SG7-SG8
SG8	- C	9999 -	LIN-PIA-SG10-SG12-SG14
SG10	- C	10 -	RFF-DTM
DTM	- C	1 -	Date/time/period

Function : To specify date, and/or time, or period.
Segment number : 16

	EDIFACT	EAN	*	Description
C507 DATE/TIME/PERIOD	M	M		
2005 Date/time/period qualifier	M an..3	M	*	36 = Expiry date 171 = Reference date/time 194 = Start date/time 206 = End date/time
2380 Date/time/period	C an..35	R		
2379 Date/time/period format qualifier	C an..3	R		102 = CCYYMMDD 203 = CCYYMMDDHHMM

Segment Notes.

This segment is used to indicate any dates associated with the references provided in the previous RFF segment.

Example :

DTM+171:19970115:102'

SG4 - C	500 -	NAD-SG7-SG8
SG8 - C	9999 -	LIN-PIA-SG10-SG12-SG14
SG12 - C	200 -	QTY-SCC-DTM
QTY - M	1 -	Quantity

Function : To specify a pertinent quantity.
Segment number : 17

	EDIFACT	EAN	*	Description
C186 QUANTITY DETAILS	M	M		
6063 Quantity qualifier	M an..3	M	*	113 = Quantity to be delivered 26E = Forecast quantity (EAN Code)
6060 Quantity	M n..15	M		
6411 Measure unit qualifier	C an..3	D		KGM = Kilogram

Segment Notes.

This segment is used to specify quantities related to for the current line item.

Example :

QTY+113:4000'

Dependency Notes :

DE 6411: This data element is only used if the product being scheduled for delivery is a variable quantity product.

SG4	- C	500 -	NAD-SG7-SG8
SG8	- C	9999 -	LIN-PIA-SG10-SG12-SG14
SG12	- C	200 -	QTY-SCC-DTM
SCC	- C	1 -	Scheduling conditions

Function : To specify scheduling conditions.
Segment number : 18

		EDIFACT	EAN	*	Description
4017	**Delivery plan status indicator, coded**	M an..3	M		1 = Firm 4 = Planning/forecast 10 = Immediate 10E = Promised (EAN Code)
4493	**Delivery requirements, coded**	C an..3	O		DA = Do not deliver after DB = Do not deliver before DD = Deliver on date P2 = Ship as soon as possible SC = Ship complete order
C329	**PATTERN DESCRIPTION**	C	O		
2013	Frequency, coded	C an..3	O		M = Monthly (calendar months) Q = Quarterly (calendar quarters) W = Weekly Y = Daily
2015	Despatch pattern, coded	C an..3	O		10 = Monday through Friday 11 = Monday through Saturday 13 = Monday 14 = Tuesday 15 = Wednesday 16 = Thursday 17 = Friday 18 = Saturday
2017	Despatch pattern timing, coded	C an..3	O		D = A.M. E = P.M. H = 24 hour clock

Segment Notes.

This segment is used to specify the type and status of the schedule being given, and optionally defining a pattern to be established, e.g., firm or proposed delivery schedule for a weekly pattern.

Example :

SCC+1+SC+W'

© Copyright EAN 1997

SG4	- C	500 -	NAD-SG7-SG8
SG8	- C	9999 -	LIN-PIA-SG10-SG12-SG14
SG12	- C	200 -	QTY-SCC-DTM
DTM	- C	2 -	Date/time/period

Function : To specify date, and/or time, or period.
Segment number : 19

	EDIFACT	EAN	*	Description
C507 DATE/TIME/PERIOD	M	M		
2005 Date/time/period qualifier	M an..3	M	*	2 = Delivery date/time, requested 61 = Cancel if not delivered by this date 63 = Delivery date/time, latest 64 = Delivery date/time, earliest 67 = Delivery date/time, current schedule 69 = Delivery date/time, promised for 52E = Forecast period (EAN Code)
2380 Date/time/period	C an..35	R		
2379 Date/time/period format qualifier	C an..3	R		102 = CCYYMMDD 203 = CCYYMMDDHHMM 718 = CCYYMMDD-CCYYMMDD

Segment Notes.

This segment is used to provide dates and times relating to the quantity and schedule details in the QTY/SCC segments. This segment may indicate date/time ranges, e.g., the start and end date for a delivery pattern, etc.

Example :

DTM+67:199701221400:203'

© Copyright EAN 1997

SG4	- C	500 -	NAD-SG7-SG8
SG8	- C	9999 -	LIN-PIA-SG10-SG12-SG14
SG14	- C	50 -	PAC
PAC	- M	1 -	Package

Function : To describe the number and type of packages/physical units.
Segment number : 20

		EDIFACT	EAN	*	Description
7224	**Number of packages**	C n..8	O		
C531	**PACKAGING DETAILS**	C	A		
7075	Packaging level, coded	C an..3	N		
7233	Packaging related information, coded	C an..3	O		50 = Package barcoded EAN-13 or EAN-8 51 = Package barcoded ITF-14 or ITF-6 52 = Package barcoded UCC or EAN-128
7073	Packaging terms and conditions, coded	C an..3	O		1 = Packaging cost paid by supplier 2 = Packaging cost paid by recipient 3 = Packaging cost not charged (returnable) 4E = Rented (EAN Code) 5E = Exchangeable (EAN Code) 6E = Deposit (EAN Code) 7E = Not reusable (EAN Code)
C202	**PACKAGE TYPE**	C	O		
7065	Type of packages identification	C an..17	A		09 = Returnable pallet (EAN Code) 201 = Pallet ISO 1 - 1/1 EURO Pallet (EAN Code) CS = Case PK = Package SL = Slipsheet
1131	Code list qualifier	C an..3	O		
3055	Code list responsible agency, coded	C an..3	O		9 = EAN (International Article Numbering association)
7064	Type of packages	C an..35	O		
C402	**PACKAGE TYPE IDENTIFICATION**	C	N		
7077	Item description type, coded	M an..3			
7064	Type of packages	M an..35			
7143	Item number type, coded	C an..3			
7064	Type of packages	C an..35			
7143	Item number type, coded	C an..3			
C532	**RETURNABLE PACKAGE DETAILS**	C	D		
8395	Returnable package freight payment responsibility, coded	C an..3	O		1 = Paid by customer 2 = Free 3 = Paid by supplier

© Copyright EAN 1997

SG14 - C	50 -	PAC			
PAC - M	1 -	Package			
Function :		To describe the number and type of packages/physical units.			
Segment number :	20				
		EDIFACT	EAN	*	Description
8393	Returnable package load contents, coded	C an..3	N		

Segment Notes.

This segment is used to provide packaging details for the current line item.

Example :

PAC+4+:52+201'

Applying this example to the first line item, the instruction is to pack 4 pallets of 1000 items each marked with EAN-128 labels.

Dependency Notes :

Composite C532 is only used where the packaging being described is returnable. This composite identifies who is responsible for the payment of its return.

SG18 - C	9999 -	LIN-PIA-SG9-SG19-SG20-SG22-SG24			
LIN - M	1 -	Line item			
Function :		To identify a line item and configuration.			
Segment number :	21				
		EDIFACT	EAN	*	Description
1082	**Line item number**	C n..6	R		Application generated number of the count of the products in the location driven delivery schedule.
1229	**Action request/notification, coded**	C an..3	O		3 = Changed 4 = No action 5 = Accepted without amendment 6 = Accepted with amendment 7 = Not accepted
C212	**ITEM NUMBER IDENTIFICATION**	C	D		
7140	Item number	C an..35	R		Format n..14 EAN-8, UPC-A, EAN-13, or DUN-14 - this is the number of the article scheduled for delivery.
7143	Item number type, coded	C an..3	R	*	EN = International Article Numbering Association (EAN) UP = UPC (Universal product code)
1131	Code list qualifier	C an..3	N		
3055	Code list responsible agency, coded	C an..3	O		
C829	**SUB-LINE INFORMATION**	C	D		
5495	Sub-line indicator, coded	C an..3	R	*	1 = Sub-line information
1082	Line item number	C n..6	R		
1222	**Configuration level**	C n..2	N		
7083	**Configuration, coded**	C an..3	D		A = Added to the configuration D = Deleted from the configuration I = Included in the configuration

Segment Notes.

The LIN segment in segment group 18 is the trigger segment to the product driven delivery schedule. By choosing this approach (specified in the BGM segment data element 1001, value 42E) the location driven approach is automatically excluded. This segment is used to identify the product or service for which the schedule or forecast is being provided.

Example :

LIN+1++5412345111115:EN'

SG18 - C	9999 -	LIN-PIA-SG9-SG19-SG20-SG22-SG24	
LIN - M	1 -	Line item	
Function :		To identify a line item and configuration.	
Segment number :	21		

Dependency Notes :

DE C212: This composite will only be used for the identification of EAN/UPC codes. If another coding structure is required, e.g., HIBC, this composite will not be used and the code will be detailed in the PIA segment.

DE C829 and 7083: These data elements are only used when sub-lines are required.

FOR A COMPLETE DESCRIPTION ON THE USAGE OF SUB-LINES PLEASE REFER TO PART I, SECTION 4.11 .

SG18 - C	9999 -	LIN-PIA-SG19-SG20-SG22-SG24			
PIA - C	10 -	Additional product id			
Function :		To specify additional or substitutional item identification codes.			
Segment number :	22				
		EDIFACT	EAN	*	Description
4347	**Product id. function qualifier**	M an..3	M	*	1 = Additional identification 2 = Identification for potential substitution 5 = Product identification 9 = No substitution accepted (EAN Code)
C212	**ITEM NUMBER IDENTIFICATION**	M	M		
7140	Item number	C an..35	R		
7143	Item number type, coded	C an..3	R		AC = HIBC (Health Industry Bar Code) BP = Buyer's part number EN = International Article Numbering Association (EAN) HS = Harmonised system IB = ISBN (International Standard Book Number) IN = Buyer's item number PV = Promotional variant number SA = Supplier's article number
1131	Code list qualifier	C an..3	N		
3055	Code list responsible agency, coded	C an..3	O		9 = EAN (International Article Numbering association) 91 = Assigned by supplier or supplier's agent 92 = Assigned by buyer or buyer's agent
C212	**ITEM NUMBER IDENTIFICATION**	C	O		
7140	Item number	C an..35	R		
7143	Item number type, coded	C an..3	R		
1131	Code list qualifier	C an..3	N		
3055	Code list responsible agency, coded	C an..3	O		
C212	**ITEM NUMBER IDENTIFICATION**	C	O		
7140	Item number	C an..35	R		
7143	Item number type, coded	C an..3	R		
1131	Code list qualifier	C an..3	N		
3055	Code list responsible agency, coded	C an..3	O		
C212	**ITEM NUMBER IDENTIFICATION**	C	O		
7140	Item number	C an..35	R		
7143	Item number type, coded	C an..3	R		

© Copyright EAN 1997

SG18 - C	9999 -	LIN-PIA-SG19-SG20-SG22-SG24
PIA - C	10 -	Additional product id

Function : To specify additional or substitutional item identification codes.
Segment number : 22

		EDIFACT	EAN	*	Description
1131	Code list qualifier	C an..3	N		
3055	Code list responsible agency, coded	C an..3	O		
C212	**ITEM NUMBER IDENTIFICATION**	C	O		
7140	Item number	C an..35	R		
7143	Item number type, coded	C an..3	R		
1131	Code list qualifier	C an..3	N		
3055	Code list responsible agency, coded	C an..3	O		

Segment Notes.

This segment is used to specify additional or substitutional item identification codes such as a buyer's or supplier's item number.

DE 4347: Product Id function qualifier has the following restricted coded values:

1 - Additional Identification - To provide an additional identity for the product identified in the LIN segment. The additional identification can consist of :

A supplemental identification which provides more information complementary to the main article number provided
in the LIN segment, e.g., a batch number, promotional variant number, product group number, etc,.

An alternative identification which may be used instead of the main article number provided in the LIN segment, e.
g., a buyers article number, an HIBC code, etc,.

2 - Identification for substitution - To provide the article number of a product which can substitute the product identified by the article number provided in the LIN segment when the latter is temporarily unavailable, e.g., a similar or identical product coded with a different EAN number (article coded in a different country), a different size unit of the same product, a similar product with for example a different brand name.

5 - Product Identification - To provide an additional product identification which is of equal importance or significance to the code provided in the LIN segment.

9 - No substitution accepted - The buyer will not accept any other product code than the one specified in the LIN segment. The code specified in the LIN segment is repeated in the PIA segment to confirm the only code acceptable.

Example:

PIA + 1 + TC56332:BP'

In this example the PIA segment is used to provide an additional identification to the article number provided in the
LIN segment. The EAN article number 5412345111115 provided in the LIN segment refers to the internal buyer's part number TC56332.

PIA + 2 + 4000862141664:EN'

© Copyright EAN 1997

SG18 - C	9999 -	LIN-PIA-SG19-SG20-SG22-SG24
PIA - C	10 -	Additional product id
Function :		To specify additional or substitutional item identification codes.
Segment number :	22	

In this example the PIA segment is used to provide an article number identification for substitution. The product identified in the LIN segment by the EAN article number 5412345111115 can be substituted by the product identified in the PIA segment by the EAN article number 4000862141664 in case the former is not available.

PIA+5+5412345123453:EN'

In this example the EAN article number 5412345123453 is included to indicate that it is of equal importance or significance to the EAN article number 5412345111115 specified in the LIN segment.

PIA+9+5412345111115:EN'

This example details the situation where the buyer explicitly specifies that no other product is acceptable but the one specified in the LIN segment. The PIA re-specifies the product code from the LIN segment.

SG18 - C	9999 -	LIN-PIA-SG19-SG20-SG22-SG24
SG19 - C	10 -	RFF-DTM
RFF - M	1 -	Reference

Function : To specify a reference.
Segment number : 23

	EDIFACT	EAN	*	Description
C506 REFERENCE	M	M		
1153 Reference qualifier	M an..3	M		CT = Contract number
1154 Reference number	C an..35	R		
1156 Line number	C an..6	O		
4000 Reference version number	C an..35	N		

Segment Notes.

This segment is used to provide reference numbers which provide further identification of each line item in the delivery schedule.

Example :

RFF+CT:652744'

SG18 - C	9999 -	LIN-PIA-SG19-SG20-SG22-SG24
SG19 - C	10 -	RFF-DTM
DTM - C	1 -	Date/time/period

Function : To specify date, and/or time, or period.
Segment number : 24

	EDIFACT	EAN	*	Description
C507 DATE/TIME/PERIOD	M	M		
2005 Date/time/period qualifier	M an..3	M	*	36 = Expiry date 171 = Reference date/time 194 = Start date/time 206 = End date/time
2380 Date/time/period	C an..35	R		
2379 Date/time/period format qualifier	C an..3	R		102 = CCYYMMDD 203 = CCYYMMDDHHMM 718 = CCYYMMDD-CCYYMMDD

Segment Notes.

This segment is used to indicate any dates associated with the references provided in the previous RFF segment.

Example :

DTM+171:19970115:102'

SG18 - C	9999 -	LIN-PIA-SG19-SG20-SG22-SG24
SG20 - C	50 -	QTY-SCC-DTM
QTY - M	1 -	Quantity

Function : To specify a pertinent quantity.
Segment number : 25

	EDIFACT	EAN	*	Description
C186 QUANTITY DETAILS	M	M		
6063 Quantity qualifier	M an..3	M	*	113 = Quantity to be delivered 26E = Forecast quantity (EAN Code)
6060 Quantity	M n..15	M		
6411 Measure unit qualifier	C an..3	D		KGM = Kilogram

Segment Notes.

This segment is used to specify quantities related to for the current line item.

Example :

QTY+113:4000'

Dependency Notes :

DE 6411: This data element is only used if the product being scheduled for delivery is a variable quantity product.

SG18 - C	9999 -	LIN-PIA-SG19-SG20-SG22-SG24
SG20 - C	50 -	QTY-SCC-DTM
SCC - C	1 -	Scheduling conditions

Function : To specify scheduling conditions.
Segment number : 26

		EDIFACT	EAN	*	Description
4017	**Delivery plan status indicator, coded**	M an..3	M		1 = Firm 4 = Planning/forecast 10 = Immediate 10E = Promised (EAN Code)
4493	**Delivery requirements, coded**	C an..3	O		DA = Do not deliver after DB = Do not deliver before DD = Deliver on date P2 = Ship as soon as possible SC = Ship complete order
C329	**PATTERN DESCRIPTION**	C	O		
2013	Frequency, coded	C an..3	O		M = Monthly (calendar months) Q = Quarterly (calendar quarters) W = Weekly Y = Daily
2015	Despatch pattern, coded	C an..3	O		10 = Monday through Friday 11 = Monday through Saturday 13 = Monday 14 = Tuesday 15 = Wednesday 16 = Thursday 17 = Friday 18 = Saturday
2017	Despatch pattern timing, coded	C an..3	O		D = A.M. E = P.M. H = 24 hour clock

Segment Notes.

This segment is used to specify the type and status of the schedule being given, and optionally defining a pattern to be established, e.g., firm or proposed delivery schedule for a weekly pattern.

Example :

SCC+1+SC+W'

© Copyright EAN 1997

SG18 - C	9999 -	LIN-PIA-SG19-SG20-SG22-SG24
SG20 - C	50 -	QTY-SCC-DTM
DTM - C	2 -	Date/time/period

Function : To specify date, and/or time, or period.
Segment number : 27

	EDIFACT	EAN	*	Description
C507 DATE/TIME/PERIOD	M	M		
2005 Date/time/period qualifier	M an..3	M	*	2 = Delivery date/time, requested 61 = Cancel if not delivered by this date 63 = Delivery date/time, latest 64 = Delivery date/time, earliest 67 = Delivery date/time, current schedule 69 = Delivery date/time, promised for 52E = Forecast period (EAN Code)
2380 Date/time/period	C an..35	R		
2379 Date/time/period format qualifier	C an..3	R		102 = CCYYMMDD 203 = CCYYMMDDHHMM 718 = CCYYMMDD-CCYYMMDD

Segment Notes.

This segment is used to provide dates and times relating to the quantity and schedule details in the QTY/SCC segments. This segment may indicate date/time ranges, e.g., the start and end date for a delivery pattern, etc.

Example :

DTM+67:199701221400:203'

SG18 - C	9999 -	LIN-PIA-SG19-SG20-SG22-SG24
SG22 - C	10 -	PAC
PAC - M	1 -	Package

Function : To describe the number and type of packages/physical units.
Segment number : 28

		EDIFACT	EAN	*	Description
7224	**Number of packages**	C n..8	O		
C531	**PACKAGING DETAILS**	C	A		
7075	Packaging level, coded	C an..3	N		
7233	Packaging related information, coded	C an..3	O		50 = Package barcoded EAN-13 or EAN-8 51 = Package barcoded ITF-14 or ITF-6 52 = Package barcoded UCC or EAN-128
7073	Packaging terms and conditions, coded	C an..3	O		1 = Packaging cost paid by supplier 2 = Packaging cost paid by recipient 3 = Packaging cost not charged (returnable) 4E = Rented (EAN Code) 5E = Exchangeable (EAN Code) 6E = Deposit (EAN Code) 7E = Not reusable (EAN Code)
C202	**PACKAGE TYPE**	C	O		
7065	Type of packages identification	C an..17	A		09 = Returnable pallet (EAN Code) 201 = Pallet ISO 1 - 1/1 EURO Pallet (EAN Code) CS = Case PK = Package SL = Slipsheet
1131	Code list qualifier	C an..3	O		
3055	Code list responsible agency, coded	C an..3	O		9 = EAN (International Article Numbering association)
7064	Type of packages	C an..35	O		
C402	**PACKAGE TYPE IDENTIFICATION**	C	N		
7077	Item description type, coded	M an..3			
7064	Type of packages	M an..35			
7143	Item number type, coded	C an..3			
7064	Type of packages	C an..35			
7143	Item number type, coded	C an..3			
C532	**RETURNABLE PACKAGE DETAILS**	C	D		
8395	Returnable package freight payment responsibility, coded	C an..3	O		1 = Paid by customer 2 = Free 3 = Paid by supplier
8393	Returnable package load contents, coded	C an..3	N		

© Copyright EAN 1997

SG22 - C	10 -	PAC
PAC - M	1 -	Package

Function : To describe the number and type of packages/physical units.
Segment number : 28

Segment Notes.

This segment is used to provide packaging details for the current line item.

Example :

PAC+4+:52+201::9'

Applying this example to the first line item, the instruction is to pack 4 pallets of 1000 items each marked with EAN-128 labels.

Dependency Notes :

Composite C532 is only used where the packaging being described is returnable. This composite identifies who is responsible for the payment of its return.

© Copyright EAN 1997

SG18 - C	9999 -	LIN-PIA-SG19-SG20-SG22-SG24
SG24 - C	500 -	NAD-SG31
NAD - M	1 -	Name and address

Function : To specify the name/address and their related function, either by CO82 only and/or structured by CO80 thru 3207.

Segment number : 29

		EDIFACT	EAN	*	Description
3035	**Party qualifier**	M an..3	M	*	DP = Delivery party
C082	**PARTY IDENTIFICATION DETAILS**	C	A		
3039	Party id. identification	M an..35	M		EAN Location number - Format n13
1131	Code list qualifier	C an..3	N		
3055	Code list responsible agency, coded	C an..3	R	*	9 = EAN (International Article Numbering association)
C058	**NAME AND ADDRESS**	C	N		
3124	Name and address line	M an..35			
3124	Name and address line	C an..35			
3124	Name and address line	C an..35			
3124	Name and address line	C an..35			
3124	Name and address line	C an..35			
C080	**PARTY NAME**	C	D		
3036	Party name	M an..35	M		Party name, clear text
3036	Party name	C an..35	O		
3036	Party name	C an..35	O		
3036	Party name	C an..35	O		
3036	Party name	C an..35	O		
3045	Party name format, coded	C an..3	O		
C059	**STREET**	C	D		
3042	Street and number/p.o. box	M an..35	M		Building name/number and street
3042	Street and number/p.o. box	C an..35	O		Name and/or P.O Box.
3042	Street and number/p.o. box	C an..35	O		
3042	Street and number/p.o. box	C an..35	O		
3164	**City name**	C an..35	D		City/town name, clear text
3229	**Country sub-entity identification**	C an..9	D		County/state, clear text
3251	**Postcode identification**	C an..9	D		Postal code
3207	**Country, coded**	C an..3	D		ISO 3166 two alpha code

Segment Notes.

This segment is used to identify the delivery points for the current line item. The delivery address given at this point in the message is valid for all following products which are identified in the LIN-PIA segments.

SG24 - C	500 -	NAD-SG31
NAD - M	1 -	Name and address
Function :		To specify the name/address and their related function, either by CO82 only and/or structured by CO80 thru 3207.
Segment number : 29		

If coded address information can not be used it is recommended to use a structured address (C080 through 3207).

Example :

NAD + DP + 5412345000013::9'

Dependency Notes :

The following composites and data elements are only used when a coded name and address can not be used. The affected composites and data elements are as follows:

C080 - C059 - 3164 - 3229 - 3251 - 3207

SG18 - C	9999 -	LIN-PIA-SG19-SG20-SG22-SG24
SG24 - C	500 -	NAD-SG31
SG31 - C	10 -	TDT-DTM
TDT - M	1 -	Details of transport

Function : To specify the transport details such as mode of transport, means of transport, its conveyance reference number and the identification of the means of transport.

Segment number : 30

		EDIFACT	EAN	*	Description
8051	**Transport stage qualifier**	M an..3	M		10 = Pre-carriage transport 20 = Main-carriage transport 30 = On-carriage transport
8028	**Conveyance reference number**	C an..17	O		Reference number covering the transport
C220	**MODE OF TRANSPORT**	C	R		
8067	Mode of transport, coded	C an..3	R		10 = Maritime transport 20 = Rail transport 30 = Road transport 40 = Air transport 50 = Mail
8066	Mode of transport	C an..17	N		
C228	**TRANSPORT MEANS**	C	O		
8179	Type of means of transport identification	C an..8	D		12 = Ship tanker 21 = Rail tanker 23 = Rail bulk car 1 = Barge chemical tanker 25 = Rail express 31 = Truck 32 = Road tanker
8178	Type of means of transport	C an..17	D		
C040	**CARRIER**	C	A		EAN location number - Format n13
3127	Carrier identification	C an..17			
1131	Code list qualifier	C an..3	O		
3055	Code list responsible agency, coded	C an..3	R	*	9 = EAN (International Article Numbering association)
3128	Carrier name	C an..35	O		
8101	**Transit direction, coded**	C an..3	O		BS = Buyer to supplier SB = Supplier to buyer
C401	**EXCESS TRANSPORTATION INFORMATION**	C	N		
8457	Excess transportation reason, coded	M an..3			
8459	Excess transportation responsibility, coded	M an..3			
7130	Customer authorization number	C an..17			
C222	**TRANSPORT IDENTIFICATION**	C	O		

© Copyright EAN 1997

SG31 - C	10 -	TDT-DTM
TDT - M	1 -	Details of transport

Function : To specify the transport details such as mode of transport, means of transport, its conveyance reference number and the identification of the means of transport.

Segment number : 30

		EDIFACT	EAN	*	Description
8213	Id. of means of transport identification	C an..9	N		
1131	Code list qualifier	C an..3	N		
3055	Code list responsible agency, coded	C an..3	N		
8212	Id. of the means of transport	C an..35	R		Vehicle licence plate/aircraft number
8453	Nationality of means of transport, coded	C an..3	O		ISO 3166 two alpha code
8281	**Transport ownership, coded**	C an..3	N		

Segment Notes.

This segment is used to specify transport details for the delivery schedule. If successive stages of transport need to be identified, then segment group 31 will be repeated for each successive stage, e.g.,on-carriage, etc,.

Example :

TDT+20++30+31'

Main carriage transport by road using a truck.

TDT+20+TD03233+30+31+:::SWIFT FREIGHT FORWARDERS+++:::CX146EU:NL'

The main carriage transport is by road using a truck from the carrier Swift Freight Forwarders. The reference number covering the transport is TD03233 and the licence plate number of the truck is CX146EU, a Netherlands licence plate number.

Dependency Notes :

Data elements 8179 and 8178 are only used when the type of transport must be specifically identified, that is, a generic description such as road transport is unsuitable.

SG18 - C	9999 -	LIN-PIA-SG19-SG20-SG22-SG24
SG24 - C	500 -	NAD-SG31
SG31 - C	10 -	TDT-DTM
DTM - C	5 -	Date/time/period

Function : To specify date, and/or time, or period.
Segment number : 31

	EDIFACT	EAN	*	Description
C507 DATE/TIME/PERIOD	M	M		
2005 Date/time/period qualifier	M an..3	M		
2380 Date/time/period	C an..35	R		
2379 Date/time/period format qualifier	C an..3	R		102 = CCYYMMDD 203 = CCYYMMDDHHMM 718 = CCYYMMDD-CCYYMMDD

Segment Notes.

This segment is used to specify dates and times relevant to the previous TDT segment.

Example :

DTM+63:199701211430:203'

UNS - M 1 - SECTION CONTROL				
Function : To separate header, detail, and summary sections of a message. Segment number : 32				
	EDIFACT	EAN	*	Description
0081 Section identification	M a1	M	*	S = Detail/summary section separation

Segment Notes.

This segment is used as a separator between the message detail section and the message summary section.

Example :

UNS + S'

© Copyright EAN 1997

CNT - C 5 -	Control total			
Function :	To provide control total.			
Segment number : 33				
	EDIFACT	EAN	*	Description
C270 CONTROL	M	M		
6069 Control qualifier	M an..3	M	*	1 = Total value of the quantity segments at line level in a message 2 = Number of line items in message
6066 Control value	M n..18	M		
6411 Measure unit qualifier	C an..3	O		

Segment Notes.

This segment is used to provide message control totals.

DE 6069: When code 1 is used the figure indicated in DE 6066 is the result of the sum of all occurrences of DE 6060 in the QTY segments in the message.

Example :

CNT+1:2534'

© Copyright EAN 1997

FTX - C	5 -	Free text
Function	:	To provide free form or coded text information.
Segment number	:	34

		EDIFACT	EAN	*	Description
4451	**Text subject qualifier**	M an..3	M		DEL = Delivery information DIN = Delivery instructions ZZZ = Mutually defined
4453	**Text function, coded**	C an..3	O		1 = Text for subsequent use 3 = Text for immediate use
C107	**TEXT REFERENCE**	C	D		References to a standard text.
4441	Free text, coded	M an..3	M		001 = …standard text…
1131	Code list qualifier	C an..3	O		
3055	Code list responsible agency, coded	C an..3	O		91 = Assigned by supplier or supplier's agent 92 = Assigned by buyer or buyer's agent
C108	**TEXT LITERAL**	C	D		
4440	Free text	M an..70	M		
4440	Free text	C an..70	O		
4440	Free text	C an..70	O		
4440	Free text	C an..70	O		
4440	Free text	C an..70	O		
3453	**Language, coded**	C an..3	D		ISO 639 two alpha code

Segment Notes.

This segment is used to specify any free text information relevant to the delivery schedule message.

Use of this segment in free form is not recommended since it may inhibit automatic processing of the delivery schedule. Coded references to standard text is an available functionality which enables automatic processing and reduces transmission and processing overheads. Standard texts should be mutually defined among trading partners and can be used to cover legal and other requirements.

Example :

FTX + ZZZ + 1 + 001::92'

Dependency Notes :

DE C107: This composite is only used when trading partners have agreed to use mutually defined code values.

DE C108: This composite is only used if coded text can not be used.

DE 3453: This data element is only used when non coded free text has been provided in data element C108.

© Copyright EAN 1997

UNT - M 1 -	MESSAGE TRAILER			
Function :	To end and check the completeness of a message.			
Segment number : 35				
	EDIFACT	EAN	*	Description
0074 Number of segments in a message	M n..6	M		The total number of segments in the message is detailed here.
0062 Message reference number	M an..14	M		The message reference number detailed here should equal the one specified in the UNH segment.

Segment Notes.

This segment is a mandatory UN/EDIFACT segment. It must always be the last segment in the message.

Example :

UNT+21+ME000001'

* * *

Example of a Location Driven Delivery Schedule.

The following is an example of a location driven delivery schedule message. The message is sent by the buyer identified by the EAN location number 5412345000013 to a supplier identified by the EAN location number 4012345500004. The date of the message is the 10th of January 1997

The delivery is requested for the 20th of January 1997 at 12:30pm. Delivery is requested for two delivery parties identified with both the delivery parties receiving the deliveries by road using trucks.

The first delivery location is identified by the EAN location number 5412345000013 and requests a delivery of 4000 units of the product identified by the EAN article number 5412345111115.

The second delivery location is identified by the EAN location number 5412345000020. The product for delivery is identified by the EAN article number 5412345123453 and is requesting 8800 units of the product.

UNH + ME000001 + DELFOR:D:96A:UN:EAN002'	Message header
BGM + 41E::9 + LDS562 + 9’	Location delivery schedule number LDS562
DTM + 137:19970110:102'	Document date 10th of January 1997
DTM + 2:199701201230:203'	Requested delivery date is at 12:30pm on the 20th of January 1997
NAD + BY + 5412345000013::9'	The buyer is identified by the EAN location number 5412345000013
NAD + SU + 4012345500004::9'	The supplier is identified by the EAN location number 4012345500004
UNS + D'	Message header detail separator
NAD + DP + 5412345000013::9'	Delivery party is identified by the EAN location number 5412345000013
TDT + 20 + + 30 + 31'	The main carriage transport to be used will be a truck
LIN + 1 + + 5412345111115:EN'	The first product in the schedule is identified by the EAN article number 5412345111115
QTY + 113:4000'	The quantity to be delivered is 4000 units
NAD + DP + 5412345000020::9'	Delivery party is identified by the EAN location number 5412345000020
TDT + 20 + + 30 + 31'	The main carriage transport to be used will be a truck
LIN + 2 + + 5412345123453:EN'	The second product in the schedule is identified by the EAN article number 5412345123453
QTY + 113:8800'	The quantity to be delivered is 8800 units
UNS + S'	Message detail and summary section separator
CNT + 1:12800'	Total value of quantity segments in the message is 12800
UNT + 18 + ME000001'	Total of 18 segments in the message

© Copyright EAN 1997

Example of a Product Driven Delivery Schedule.

The following is an example of a product driven delivery schedule message. The message is sent by the buyer identified by the EAN location number 5412345000013 to a supplier identified by the EAN location number 4012345500004. The date of the message is the 10th of January 1997. The message is sent as a confirmation to previously agreed schedule sent by means other than EDI. No acknowledgment is required for the transmission.

The delivery is requested for the 20th of January 1997 at 12:30pm. Delivery is requested for one product to two delivery parties.

The product identified by the EAN article number 5412345111115. The delivery locations are identified by the EAN location numbers 5412345000051 and 5412345000068 and requests a delivery of 350 units to each delivery location.

UNH + ME000011 + DELFOR:D:96A:UN:EAN002'	Message header
BGM + 42E::9 + PDS416 + 42 + NA'	Product delivery schedule number PDS416 is a confirmation of a schedule sent previously by means other than EDINo acknowledgment to the message is needed
DTM + 137:19970110:102'	Message date is the 10th of January 1997
DTM + 2:199701201230:203'	Delivery is requesteded for 12:30pm on the 20th of January 1997
NAD + BY + 5412345000013::9'	The buyer is identified by the EAN location number5412345000013
NAD + SU + 4012345500004::9'	The supplier is identified by the EAN location number 4012345500004
UNS + D'	Message header/detail separator
LIN + 1 + + 5412345111115:EN'	The first line item in the schedule is identified by the EAN article number 5412345111115
QTY + 113:350'	Quantity to be delivered is 350 units
NAD + DP + 5412345000051::9'	First delivery party is identified by the EAN location number 5412345000051
NAD + DP + 5412345000068::9'	Second delivery party is identified by the EAN location number 5412345000068
UNS + S'	Message detail/summary separator
CNT + 1:350'	Total value of the quantity segments in the message is 350
UNT + 14 + ME000011'	Total number of 14 segments in the message

© Copyright EAN 1997

Example of a Product Driven Delivery Schedule Response.

The following is an example of a product driven delivery schedule response message. The message is sent by the supplier identified by the EAN location number 4012345500004 to the buyer identified by the EAN location number 5412345000013. The date of the message is the 12th of January 1997.

The message accepts the previously sent product driven delivery schedule message identified by the number PDS416 sent the 10th of January of 1997. As the previous message is accepted only the mandatory segments, the identification of the schedule being accepted, and the parties needs to be communicated.

UNH + ME000032 + DELFOR:D:96A:UN:EAN002'	Message header
BGM + 29E::9 + PDRS216 + 9 + 29'	Product delivery schedule response number PDRS216 indicates that the previous message has been accepted without amendment
DTM + 137:19970112:102'	Message date is the 12th of January 1997
RFF + AAN:PDS416'	Reference to delivery schedule being accepted number PDS416
DTM + 171:19970110:102'	Date of delivery schedule being accepted is the 10th of January 1997
NAD + BY + 5412345000013::9'	The buyer is identified by the EAN location number5412345000013
NAD + SU + 4012345500004::9'	The supplier is identified by the EAN location number 4012345500004
UNS + D'	Message header/detail separator
LIN + 1'	LIN segment inserted to avoid segment collision between two UNS segments
UNS + S'	Message detail/summary separator
UNT + 11 + ME000032'	Total number of 11 segments in the message

Note : The EDI interchange will include the UNB…UNZ segments and, if applicable, the UNG…UNE segments (see Part 1, section 2.7)

* * *