DRAWING ADMINISTRATION MESSAGE

1. Introduction

* Status

MESSAGE TYPE	: CONDRA
REFERENCE DIRECTORY	: D.96A
EANCOM SUBSET VERSION	: 001

* Definition

This message will be used for the administration of each exchange of an external object. An external object may be for example a photograph, a video, a film, a CAD file. The message will give additional information about the object and it will refer to the message, and if necessary to the line number to which it is related.

* Principles

Because the transmission of external objects is not always synchronised with the transmission of the message which includes the EAN article number or the EAN location number, a link must be established. The information transmitted in the link is the following:

1. Identification of the message related to the object (RFF)

This is the number (BGM/DE1004) of the message used to exchange data (e.g. article/location numbers) which is being related to the object.

2. Line number within the identified message (RFF)

This is a line number from the message identified in 1 above.

3. External Object Identifier (EFI)

When the external object is in Digital Data Format, it is recommended that the external object name must exactly correspond to the name of the external file sent by tele-transmission or by other means, i.e. the name of the external file without its extension.

4. External Object Data Format (EFI)

- An external object may be in “Digital Data Format” or “Non-Digital Data Format”. An external object is considered to be in **Digital Data Format** when it may be processed, as a byte string, by a computer. In this case the external object Format can have the file extension (e.g. BMP, PCD, etc.)

- An external object is considered to be in **Non-Digital Data Format** when it must be

© Copyright EAN 1998

processed manually. A external object in Non Digital Format is exchanged in the form of a recording on a physical medium (e.g. a photograph on paper, or an analogical sound sequence). The external object format (e.g. PAL, SECAM) enables the recipient to know the type of reading equipment which will be required to retrieve the object.

The recipient of an External Object will apply different processing procedures to it depending on whether it is in Digital Data Format or Non-Digital Data Format. For this reason:

When two or more external objects are exchanged for the same product in a Digital Data Format and in a Non Digital Data Format, each must be considered as distinct external objects identified by distinct names.

An external file is to be considered as being made up of only one external object. This implies that it is advisable to create external files which only contain one external object. For example, an external file which includes several pictures will be considered as only one external object.

5. External Object Physical Medium (CED)

This information enables the recipient to identify the physical medium which will be required to read, or was used to create the object, e.g. a CD-ROM, a diskette, a directory on a computer.

Where the external object is exchanged as a **data file** the following information should also be transfered:

*** External File Generation Environment:**

- the generating software name (CED);
- the software version (CED);
- the software release (CED);
- the original medium type (CED) used originally to generate the external file (e.g. transparency,…)

*** The Computer System Environment:**

- the operating system name under which the file was generated (CED);
- the operating system version (CED);
- the operating system release (CED).

*** The Compression Environment**

- the compression software name used to compress the data in the file (CED);
- the compression software version (CED);
- the compression software release (CED);
- the file size before compression (QTY);
- the file size after compression (QTY).

© Copyright EAN 1998

6. External Object Generation Date (DTM)

The date on which the external object was generated.

Rules for sending the CONDRA message

Within the recipient's application a link table should be held. Each time a CONDRA message is sent, the table should be updated. ALL the links of a product MUST be sent in the same CONDRA message. If the CONDRA message mentions an EAN Article Number/EAN Location Number which is already in the link table, the existing link will be erased and replaced by the new one.

Example with a PARTIN message:

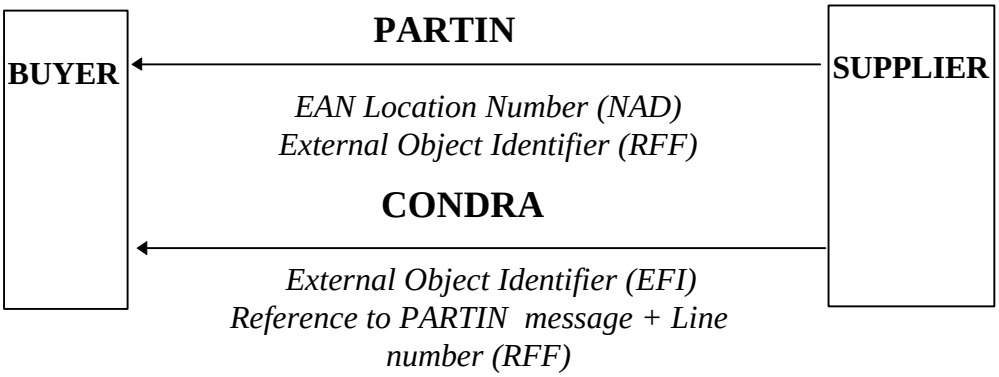

Example with a PRODAT/PRICAT message sent before CONDRA:

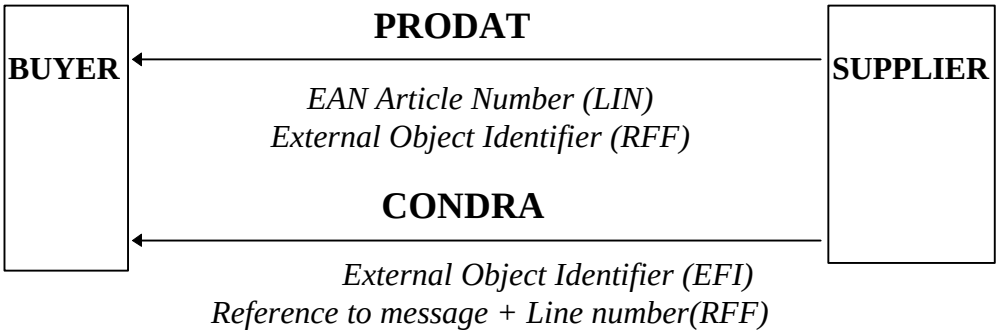

Example with a CONDRA message sent before a PRODAT/PRICAT message:

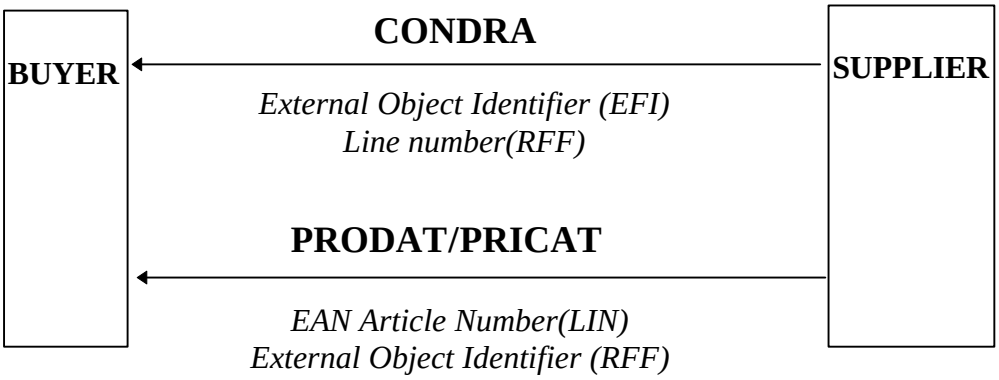

The CONDRA message can be transmitted either before or after the PARTIN, PRODAT or PRICAT message.

Rules for sending the external object

It should be agreed by the partners whether it is needed to send the CONDRA message before the external object is sent.

Rules for the deletion of an external object

Since an external object may be related to several products, the external object can only be deleted if the updating of the link table reveals that the external object is no longer linked to any product.

* * *

© Copyright EAN 1998

2. Message Structure Chart

Drawing AdministrationHeading Section

UNH	1	M	1	MESSAGE HEADER
BGM	2	M	1	Beginning of message
DTM	3	M	5	Date/time/period
SG1		M	10	RFF
RFF	4	M	1	Reference
SG2		M	999	NAD-SG4
NAD	5	M	1	Name and address
SG4		C	10	CTA-COM
CTA	6	M	1	Contact information
COM	7	C	5	Communication contact

Drawing AdministrationDetail Section

SG5		C	99	EFI-CED-RFF-DTM-QTY
EFI	8	M	1	External file link identification
CED	9	M	10	Computer environment details
RFF	10	C	10	Reference
DTM	11	C	5	Date/time/period
QTY	12	C	5	Quantity

Drawing Administration Summary Section

UNT	13	M	1	MESSAGE TRAILER

* * *

© Copyright EAN 1998

3. Branching Diagram

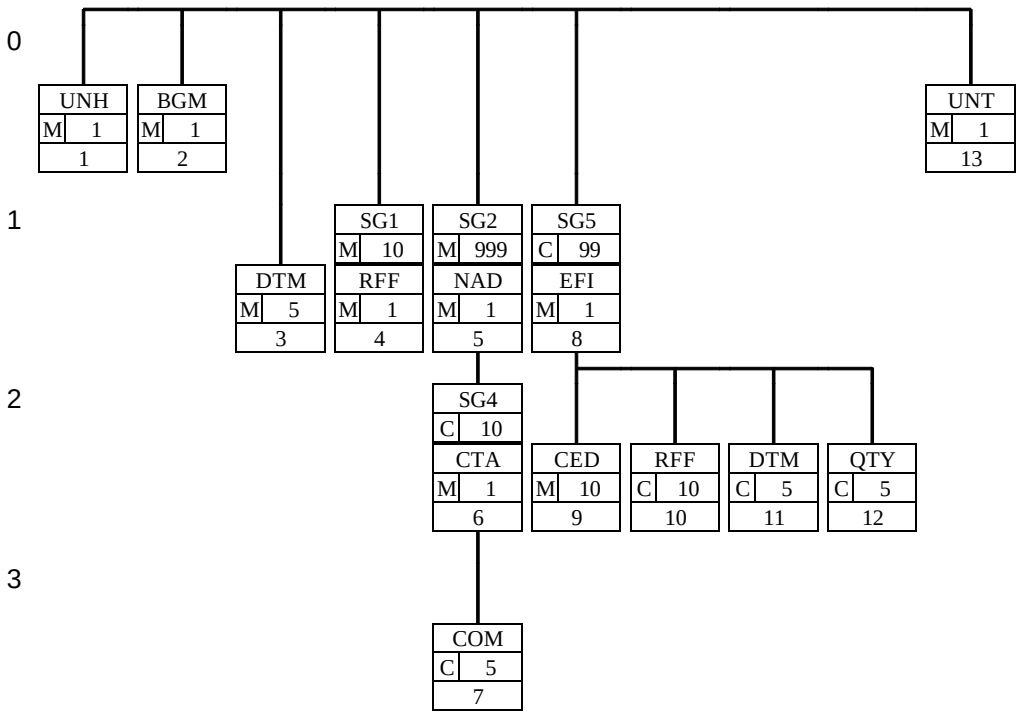

4. Segments Description

Drawing Adminstration Heading Section

UNH - M1 - MESSAGE HEADER
This segment is used to head, identify and specify a message.

BGM - M1 - Beginning of message
This segment is used to indicate the type and function of a message and to transmit the identifying number.

DTM - M5 - Date/time/period

This segment is used to specify any dates related to the complete message.

SG1 - M10 - RFF
A group of segments used for quoting references applicable to the message.

RFF - M1 - Reference

This segment is used to provide references for the entire message.

SG2 -M 999 - NAD - SG4
A group of segments identifying all the relevant parties and their contact and communications information.

NAD - M1 - Name and address

This segment is used to identify the parties exchanging the message. Identification of the message sender and recipient is mandatory.

SG4 - C10 - CTA-COM
A group of segments giving contact details of the specific person or department within the party identified in the NAD segment.

CTA - M1 - Contact information
This segment is used to identify a contact department or name within the party specified in the NAD segment. The use of EAN location numbers is particularly suitable for this purpose.

COM - C5 - Communication contact
This segment is used to provide the communications number and type of communications, for the person or department identified in the preceding CTA segment.

Drawing Adminstration Detail Section

SG5 - C99 -EFI-CED-RFF-DTM-QTY
A group of segments that refers through an external file identification to each of the external objects providing information about each of the objects.

EFI - M1 - External file link identification
This segment is used to identify an external object by indicating its identification, the format, and its sequence number on the physical medium.

CED - M10 - Computer environment details
This segment is used to give details of the physical medium used to generate the external object.

RFF - C10 - Reference
This segment is used to identify the EAN article number or location number to which the external object is related and the EANCOM message in which the article number or location number is mentioned .

DTM - C5 - Date/time/period
This segment is used to indicate the date/time on which the external object was generated.

QTY - C5 - Quantity
This segment is used to identify the size/volume of the external object identified in the EFI segment.

Drawing Adminstration Summary Section

UNT - M1 - MESSAGE TRAILER
This segment is a mandatory UN/EDIFACT segment. It must always be the last segment in the message.

* * *

5. Segments Layout

This section describes each segment used in the EANCOM Drawing Administration message. The original EDIFACT segment layout is listed. The appropriate comments relevant to the EANCOM subset are indicated.

Notes:

1. The segments are presented in the sequence in which they appear in the message. The segment or segment group tag is followed by the (M)andatory / (C)onditional indicator, the maximum number of occurrences and the segment description.

2. Reading from left to right, in column one, the data element tags and descriptions are shown, followed by in the second column the EDIFACT status (M or C), the field format, and the picture of the data elements. These first pieces of information constitute the original EDIFACT segment layout.

   Following the EDIFACT information, EANCOM specific information is provided in the third, fourth, and fifth columns. In the third column a status indicator for the use of (C)onditional EDIFACT data elements (see 2.1 through 2.3 below), in the fourth column the restricted indicator (see point 3 on the following page), and in the fifth column notes and code values used for specific data elements in the message.

2.1 (**M**)andatory data elements in EDIFACT segments retain their status in EANCOM.

2.2 Additionally, there are five types of status for data elements with a (C)onditional EDIFACT status, whether for simple, component or composite data elements. These are listed below and can be identified when relevant by the following abbreviations:

-	REQUIRED	**R**	Indicates that the entity is required and must be sent.
-	ADVISED	**A**	Indicates that the entity is advised or recommended.
-	DEPENDENT	**D**	Indicates that the entity must be sent in certain conditions, as defined by the relevant explanatory note.
-	OPTIONAL	**O**	Indicates that the entity is optional and may be sent at the discretion of the user.
-	NOT USED	**N**	Indicates that the entity is not used and should be omitted.

2.3 If a composite is flagged as **N, NOT USED**, all data elements within that composite will have blank status indicators assigned to them.

© Copyright EAN 1998

3. Status indicators detailed in the fourth column which directly relate to the code values detailed in the fifth column may have two values;

- RESTRICTED * A data element marked with an asterix (*) in the fourth column indicates that the listed codes in column five are the only codes available for use with this data element, in this segment, in this message.

- OPEN All data elements where coded representation of data is possible and a restricted set of code values is not indicated are open (no asterix in fourth column). The available codes are listed in the EANCOM Data Elements and Code Sets Directory. Code values may be given as examples or there may be a note on the format or type of code to be used.

* * *

UNH - M 1 - MESSAGE HEADER				
Function : To head, identify and specify a message. Segment number : 1				
	EDIFACT	EAN	*	Description
0062 Message reference number	M an..14	M		Senders unique message reference. Sequence number of messages in the interchange. DE 0062 in UNT will have the same value. Generated by the sender.
S009 MESSAGE IDENTIFIER	M	M		
0065 Message type identifier	M an..6	M	*	CONDRA = Drawing administration message
0052 Message type version number	M an..3	M	*	D = Draft directory
0054 Message type release number	M an..3	M	*	96A = Version 96A
0051 Controlling agency	M an..2	M	*	UN = UN/ECE/TRADE/WP.4, United Nations Standard Messages (UNSM)
0057 Association assigned code	C an..6	M	*	EAN001 = EAN Version control number
0068 Common access reference	C an..35	N		
S010 STATUS OF THE TRANSFER	C			
0070 Sequence message transfer number	M n..2	N		
0073 First/last sequence message transfer indication	C a1			

Segment Notes.

This segment is used to head, identify and specify a message.

DE's 0065, 0052, 0054 and 0051: Indicate that the message is a UNSM Drawing administration message based on the D.96A directory under the control of the United Nations.

DE 0057: Indicates that the message is the EANCOM version 001 of the Drawing Administration Message.

UNH+ME000001+CONDRA:D:96A:UN:EAN001'

© Copyright EAN 1998

BGM - M	1 -	Beginning of message
Function :		To indicate the type and function of a message and to transmit the identifying number.
Segment number : 2		

		EDIFACT	EAN	*	Description
C002	**DOCUMENT/MESSAGE NAME**	C			
1001	Document/message name, coded	C an..3	R	*	13E = Drawing administration message (EAN Code)
1131	Code list qualifier	C an..3	N		
3055	Code list responsible agency, coded	C an..3	R	*	9 = EAN (International Article Numbering association)
1000	Document/message name	C an..35	N		
1004	**Document/message number**	C an..35	R		Number assigned by the document sender.
1225	**Message function, coded**	C an..3	R	*	9 = Original
4343	**Response type, coded**	C an..3	N		

Segment Notes.

This segment is used to indicate the type and function of a message and to transmit the identifying number.

DE 1004: It is recommended that the length of the document number be restricted to a maximum of 17 characters and that the number is unique.

Example :

BGM + 13E::9 + 100001 + 9'

DTM - M	5 -	Date/time/period

Function : To specify date, and/or time, or period.
Segment number : 3

	EDIFACT	EAN	*	Description
C507 DATE/TIME/PERIOD	M	M		
2005 Date/time/period qualifier	M an..3	M	*	137 = Document/message date/time
2380 Date/time/period	C an..35	R		
2379 Date/time/period format qualifier	C an..3	R		102 = CCYYMMDD

Segment Notes.

This segment is used to specify any dates related to the complete message.

DE 2005: Identification of the 'Document/message date/time' (code value 137) is mandatory in the Drawing Administration message.

Example:

DTM+137:19970830:102'

The Drawing Administration Message was created on the 30th of August 1997.

SG1 - M	10 -	RFF			
RFF - M	1 -	Reference			
Function :		To specify a reference.			
Segment number : 4					
		EDIFACT	EAN	*	Description
C506	**REFERENCE**	M	M		
1153	Reference qualifier	M an..3	M		AER = Project specification number
1154	Reference number	C an..35	R		
1156	Line number	C an..6	N		
4000	Reference version number	C an..35	N		

Segment Notes.

This segment is used to provide references for the entire message.

Example :

RFF+AER:566241'

SG2 - M	999 -	NAD-SG4	
NAD - M	1 -	Name and address	
Function :		To specify the name/address and their related function, either by CO82 only and/or structured by CO80 thru 3207.	
Segment number : 5			

		EDIFACT	EAN	*	Description
3035	**Party qualifier**	M an..3	M		BY = Buyer MR = Message recipient MS = Document/message issuer/sender SU = Supplier
C082	**PARTY IDENTIFICATION DETAILS**	C	A		
3039	Party id. identification	M an..35	M		EAN Location Number - Format n13
1131	Code list qualifier	C an..3	N		
3055	Code list responsible agency, coded	C an..3	R	*	9 = EAN (International Article Numbering association)
C058	**NAME AND ADDRESS**	C	N		
3124	Name and address line	M an..35			
3124	Name and address line	C an..35			
3124	Name and address line	C an..35			
3124	Name and address line	C an..35			
3124	Name and address line	C an..35			
C080	**PARTY NAME**	C	D		
3036	Party name	M an..35	M		Party Name in clear text
3036	Party name	C an..35	O		
3036	Party name	C an..35	O		
3036	Party name	C an..35	O		
3036	Party name	C an..35	O		
3045	Party name format, coded	C an..3	O		
C059	**STREET**	C	D		
3042	Street and number/p.o. box	M an..35	M		Building Name/Number and Street
3042	Street and number/p.o. box	C an..35	O		Name and/or P.O. Box
3042	Street and number/p.o. box	C an..35	O		
3042	Street and number/p.o. box	C an..35	O		
3164	**City name**	C an..35	D		City/Town, clear text.
3229	**Country sub-entity identification**	C an..9	D		County/State in clear text.

© Copyright EAN 1998

SG2 - M	999 -	NAD-SG4			
NAD - M	1 -	Name and address			
Function :		To specify the name/address and their related function, either by CO82 only and/or structured by CO80 thru 3207.			
Segment number : 5					
3251	**Postcode identification**	C an..9	D		Postal Code
3207	**Country, coded**	C an..3	D		ISO 3166 two alpha code

Segment Notes.

This segment is used to identify the parties exchanging the message. Identification of the message sender and recipient is mandatory.

DE 3039: For identification of parties it is recommended to use EAN location numbers.

If coded address information can not be used it is recommended to use a structured address (C080 through 3207).

Example :

NAD + MR + 5071615111110::9'

NAD + MS + 5098765111111::9'

Dependency Notes :

The following composites and data elements are only used when a coded name and address can not be used. The affected composites and data elements are as follows:

C080 - C059 - 3164 - 3229 - 3251 - 3207

© Copyright EAN 1998

SG2	- M	999 -	NAD-SG4
SG4	- C	10 -	CTA-COM
CTA	- M	1 -	Contact information

Function : To identify a person or a department to whom communication should be directed.
Segment number : 6

		EDIFACT	EAN	*	Description
3139	**Contact function, coded**	C an..3	R		IC = Information contact
C056	**DEPARTMENT OR EMPLOYEE DETAILS**	C	O		
3413	Department or employee identification	C an..17	O		
3412	Department or employee	C an..35	O		

Segment Notes.

This segment is used to identify a contact department or name within the party specified in the NAD segment. The use of EAN location numbers is particularly suitable for this purpose.

Example :

CTA + IC + 5412345000006'

The information contact is identified by means of the EAN location number 5412345000006.

SG2 - M	999 -	NAD-SG4
SG4 - C	10 -	CTA-COM
COM - C	5 -	Communication contact

Function : To identify a communication number of a department or a person to whom communication should be directed.

Segment number : 7

	EDIFACT	EAN	*	Description
C076 COMMUNICATION CONTACT	M	M		
3148 Communication number	M an..512	M		
3155 Communication channel qualifier	M an..3	M		EI = EDI EM = Electronic mail FX = Fax TE = Telephone TL = Telex XF = X.400 WWW = WWW Site (EAN Code)

Segment Notes.

This segment is used to provide the communications number and type of communications, for the person or department identified in the preceding CTA segment.

Example :

COM+004461879523:FX'

SG5	- C	99 -	EFI-CED-RFF-DTM-QTY
EFI	- M	1 -	External file link identification

Function : To specify the link of one non-EDIFACT external file to an EDIFACT message.
Segment number : 8

	EDIFACT	EAN	*	Description
C077 FILE IDENTIFICATION	M	M		
1508 File name	C an..35	M		External Object Identification
7008 Item description	C an..35	O		
C099 FILE DETAILS	C	R		
1516 File format	M an..17	M		
1056 Version	C an..9	O		
1503 Data format, coded	C an..3	R		3 = Binary 4 = Analog (EAN Code)
1502 Data format	C an..35	N		
1050 Sequence number	C an..6	O		Sequence number on the physical medium

Segment Notes.

This segment is used to identify an external object by indicating its identification, the format, and its sequence number on the physical medium.

DE 1508: This data element is used to provide the external object's identification.

DE 1516: This data element is used to describe the format of the externalobject. If the object is a computer file the format may be BMP, PCX. If the external object is a video, the format may be SECAM, PAL, etc… If the object is in a physical form such as paper or transparancies, this data element should be filled with "OTHER".

Example:

EFI+ECRSTRUC:+BMP::3'

The object is a binary file named ECRSTRUC

SG5	- C	99 -	EFI-CED-RFF-DTM-QTY-SG6
CED	- M	10 -	Computer environment details

Function : To give a precise definition of all necessary elements belonging to the configuration of
a computer system like hardware, firmware, operating system, communication (VANS, network type, protocol, format) and application software.

Segment number : 9

		EDIFACT	EAN	*	Description
1501	**Computer environment details qualifier**	M an..3	M		2 = Operating system 3 = Application software 5 = Sending system
C079	**COMPUTER ENVIRONMENT IDENTIFICATION**	M	R		
1511	Computer environment, coded	C an..3	R		1E = CD-ROM 2E = Generating software 3E = Compression software 4E = Compression method 5E = Physical medium name 6E = Original medium type
1131	Code list qualifier	C an..3	N		
3055	Code list responsible agency, coded	C an..3	R		9 = EAN (International Article Numbering association)
1510	Computer environment	C an..35	A		
1056	Version	C an..9	A		
1058	Release	C an..9	A		
7402	Identity number	C an..35	N		

Segment Notes.

This segment is used to give details of the physical medium used to generate the external object.

This segment can indicate the external object's exchange medium (e.g. a CD-ROM, a diskette, tele-transmission,…), generating environment (i.e. the generating software), compression environment (i.e. the compression software used), compression method, system environment (i.e the operating system), the physical medium name, the original medium type.

Example:

CED+5+1E::9'

SG5 - C	99 -	EFI-CED-RFF-DTM-QTY-SG6	
RFF - C	10 -	Reference	

Function : To specify a reference.
Segment number : 10

	EDIFACT	EAN	*	Description
C506 REFERENCE	M	R		
1153 Reference qualifier	M an..3	M		PL = Price list number PDE = Previous product data file number (EAN Code)
1154 Reference number	C an..35	R		Number of the message
1156 Line number	C an..6	O		
4000 Reference version number	C an..35	N		

Segment Notes.

This segment is used to identify the EAN article number or location number to which the external object is related and the EANCOM message in which the article number or location number is mentioned .

Example:

RFF+PL:541073: 5412345123453'

SG5 - C	99 -	EFI-CED-RFF-DTM-QTY-SG6			
DTM - C	5 -	Date/time/period			
Function :		To specify date, and/or time, or period.			
Segment number :	11				
		EDIFACT	EAN	*	Description
C507	**DATE/TIME/PERIOD**	M			
2005	Date/time/period qualifier	M an..3	M		22E = Generation date and, or time (EAN Code)
2380	Date/time/period	C an..35	R		
2379	Date/time/period format qualifier	C an..3	R		203 = CCYYMMDDHHMM

Segment Notes.

This segment is used to indicate the date/time on which the external object was generated.

Example:

DTM+22E:199705021200:203'

SG5 - C	99 -	EFI-CED-RFF-DTM-QTY-SG6	
QTY - C	5 -	Quantity	

Function : To specify a pertinent quantity.
Segment number : 12

	EDIFACT	EAN	*	Description
C186 QUANTITY DETAILS	M			
6063 Quantity qualifier	M an..3	M		73E = File size before compression 74E = File size after compression
6060 Quantity	M n..15	R		
6411 Measure unit qualifier	C an..3	R		KB = Kilocharacter

Segment Notes.

This segment is used to identify the size/volume of the external object identified in the EFI segment.

Example:

QTY+74E:12:KB'

UNT - M 1 - MESSAGE TRAILER				
Function : To end and check the completeness of a message. Segment number : 13				
	EDIFACT	EAN	*	Description
0074 Number of segments in a message	M n..6	M		The total number of segments in the message.
0062 Message reference number	M an..14	M		The message reference numbered detailed here should equal the one specified in the UNH segment.

Segment Notes.

This segment is a mandatory UN/EDIFACT segment. It must always be the last segment in the message.

Example :

UNT + 13 + ME000001'

Example Drawing Administration Message

The following is an example of the Drawing Adminstration message putting a link between a file called ECRSTRUC on a CD and an article with EAN number 5412345123453 which was mentioned in a previous PRICAT message with number 541073.

UNH + ME00001 + CONDRA:D:96A:UN:EAN001'	Message Header
BGM + 13E::9 + 10001 + 9'	Drawing Administration message with number 10001
DTM + 137:19980830:102'	Message date 30th of August 1998.
RFF + AER:566241'	Reference to project specification number 566241.
NAD + MR + 5071615111110::9'	Supplier identified by EAN Location number 5071615111110
NAD + MS + 5098765111111::9'	Buyer identified by EAN Location number 5098765111111
EFI + ECRSTRUC: + BMP::3'	The name of the binary file is ECRSTRUC.
CED + + 1E::9'	The object's exchange medium is a CD-ROM.
RFF + PL:541073:6'	The object is related to line 6 from the PRICAT message number 541073.
DTM + 199805021200:203'	The object was generated at 1200 on the 2nd of May 1998.
UNT + 11 + ME00001'	Total numbers of segments in the message equals 11.

* * * *